DP70NH - DP80NH - DP100NH

Preliminary specifications

Engine powered lift trucks

7.0 - 10.0 tonnes

	Characteristics					
1.1	Manufacturer (abbreviation)			Cat Lift Trucks	Cat Lift Trucks	Cat Lift Trucks
1.2	Manufacturer's model designation			**DP70NH**	**DP80NH**	**DP100NH**
1.3	Power source: (battery, diesel, LPG, petrol)			Diesel	Diesel	Diesel
1.4	Operator type: pedestrian, (operator)-standing, -seated			Seated	Seated	Seated
1.5	Load capacity	Q	(kg)	7000	8000	10000
1.6	Load centre distance	c	(mm)	600	600	600
1.8	Load distance, axle to fork face	x	(mm)	625	720	710
1.9	Wheelbase	y	(mm)	2250	2500	2800
	Weight					
2.1	Truck weight, without load / including battery (simplex mast, lowest lift height)		kg	9360	10960	12300
2.2	Axle loading with maximum load, front/rear (simplex mast, lowest lift height)		kg	14530 / 1830	17040 / 1940	20100 / 2200
2.3	Axle loading without load, front/rear (simplex mast, lowest lift height)		kg	3750 / 5610	4820 / 6160	5420 / 6880
	Wheels, Drive Train					
3.1	Tyres: V=solid, L=pneumatic, SE=solid pneumatic - front/rear			L / L	L / L	L / L
3.2	Tyre dimensions, front			8.25X15-14PR	9.00X20-14PR	9.00X20-14PR
3.3	Tyre dimensions, rear			8.25X15-14PR	9.00X20-14PR	9.00X20-14PR
3.5	Number of wheels, front/rear (x=driven)			4x / 2	4x / 2	4x / 2
3.6	Track width (centre of tyres), front	b10	(mm)	1470	1600	1600
3.7	Track width (centre of tyres), rear	b11	(mm)	1700	1700	1700
	Dimensions					
4.1	Mast tilt, forwards/backwards	α/β	°	6/12	6/12	6/12
4.2	Height with mast lowered (see tables)	h1	(mm)	2500	2700	2850
4.3	Free lift (see tables)	h2	(mm)	215	205	205
4.4	Lift height (see tables)	h3	(mm)	3000	3000	3000
4.5	Overall height with mast raised	h4	(mm)	4420	4420	4330
4.7	Height to top of overhead guard	h6	(mm)	2450	2560	2560
4.8	Seat height	h7	(mm)	1310	1415	1415
4.12	Tow coupling height	h10	(mm)	430	515	515
4.19	Overall length	l1	(mm)	4820	5160	5475
4.20	Length to fork face (includes fork thickness)	l2	(mm)	3600	3940	4255
4.21	Overall width	b1/b2	(mm)	1995 / -	2165 / -	2245 / -
4.22	Fork dimensions (thickness, width, length)	s, e, l	(mm)	70 x 150 x 1220	75 x 170 x 1220	75 x 175 x 1220
4.23	Fork carriage to DIN 15 173 A/B/no			No	No	No
4.24	Fork carriage width	b3	(mm)	1710	1810	2210
4.31	Ground clearance under mast, with load	m1	(mm)	190	245	245
4.32	Ground clearance at centre of wheelbase, with load (forks lowered)	m2	(mm)	225	320	320
4.33	Working aisle width with 1000 x1200 mm pallets, crosswise	Ast	(mm)	5185	5570	5810
4.34b	Working aisle width with 800 x1200 mm pallets, lengthwise	Ast	(mm)	5385	5370	5610
4.35	Turning circle radius	Wa	(mm)	3360	3650	3900
4.36	Minimum distance between centres of rotation	b13	(mm)	1200	1280	1320
	Performance					
5.1	Travel speed, with/without load		km/h	26.0 / 30.0	25.0 / 30.0	24.0 / 30.0
5.2	Lifting speed, with/without load		m/s	0.46 / 0.55	0.45 / 0.47	0.39 / 0.41
5.3	Lowering speed, with/without load		m/s	0.45 / 0.50	0.45 / 0.45	0.47 / 0.34
5.5	Rated drawbar pull, with/without load (@1.6 km/h)		N	52900 / 21600	57300 / 27400	57300 / 31400
5.7	Gradeability, with/without load (@1.6 km/h)		%	29 / 19	27 / 19	22 /20
5.9	Acceleration time (10 metres) with/without load		s	-/-	-/-	-/-
5.10	Service brakes (mechanical/hydraulic/electric/pneumatic)			Hydraulic/Mechanical	Hydraulic/Mechanical	Hydraulic/Mechanical
	IC Engine					
7.1	Manufacturer / Type			Isuzu 6BG1	Isuzu 6BG1	Isuzu 6BG1
7.2	Rated output to ISO 1585 (S.A.E. gross)		kW	82.4	84.6	84.6
7.3	Rated speed to DIN 70 020		rpm	2000	2100	2100
7.4	Number of cylinders / cubic capacity		cm^3	6 / 6494	6 / 6494	6 / 6494
7.5	Fuel consumption according to VDI 60 cycle		l/h / kg/h	7.2 / -	7.6 / -	8.4 / -
7.6	Max torque (S.A.E. gross)		Nm	417	417	417
7.7	Max torque at engine speed		rpm	1500	1500	1500
	Miscellaneous					
8.1	Type of drive control			Powershift 2/2	Powershift 2/2	Powershift 2/2
8.2	Maximum operating pressure for attachments		bar	200	200	200
8.3	Oil flow for attachments		l/min	-/-	-/-	-/-
8.4	Noise level, value at operator's ear (EN 12053)		dB(A)	85	85	85
8.5	Towing coupling design / DIN type, ref.			Pin	Pin	Pin

$A_{st} = W_a + x + l_6 + a$ if $\frac{b_{12}}{2} \leq b_{13}$

A_{st} = Working aisle width with load

W_a = Turning radius

a = Safety clearance = (2 x 100 mm)

x = Load distance, axle to fork face

l_6 = Pallet length (800 or 1000 mm)

b_{12} = Pallet width (1200 mm)

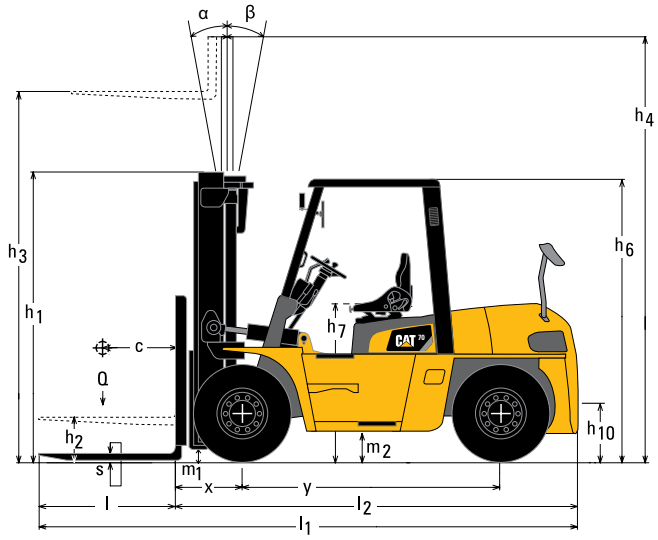

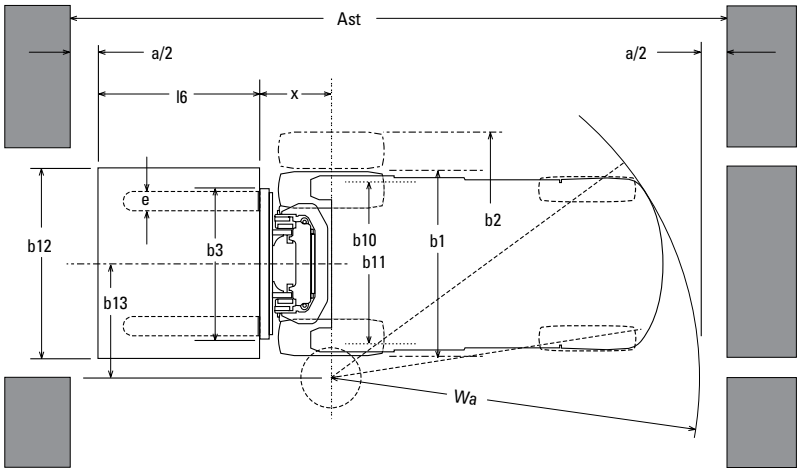

Lower Cost of Ownership

- Powerful 6.5L direct-injection diesel engine delivers strong performance with rapid acceleration and low fuel consumption.
- Dependable engine and tough truck components that resist damage and wear help to minimise repair and service bills.
- Quick and easy access to all components for routine checks and maintenance makes it easier to keep the truck in sound working condition, saving time and reducing expense.

Unmatched Productivity

- One of the highest lift speeds in its class lets your operators get more done each shift.
- The automatic, 2-speed Powershift transmission offers controlled, yet powerful acceleration for maximum productivity.
- Automotive pedal layout for easy and intuitive operation.
- Low footstep and well-placed grab handle makes on/off access easy.
- Extremely rigid mast with a thoughtfully designed layout of the rollers offers excellent visibility.
- Boltless floorboards which can be easily removed, without any tools, for easy maintenance.
- Durable LED lights as standard equipment.

Safety and Ergonomics

- Mast with narrow channels, combined with the high-visibility overhead guard gives the operator clear views forwards and upwards.
- Presence Detection System (PDS) gives audible warning if seat belt is not fastened and prevents all travel and hydraulic movement if operator is not correctly seated.
- Backup alarm supplied as standard.
- Memory type fuel gauge.
- Conveniently placed grab bars and steps ease access to operator compartment.

Options

- Wide range of attachments available.
- Cabin with air conditioning.
- Speedometer.
- Torque converter oil temperature/pressure gauge.
- Spark arresting & smoke reducing muffler.
- Vertical exhaust.

Cat® Lift Trucks.

Your partner in materials handling.

DP70NH						
Mast Type	h3 mm	h1 mm	h4 mm	h2/h5 mm	Tilt angle Fwd/Bwd deg	Q @ c = 600mm kg
Simplex	3000	2500	4420	215	6-12	7000
	3300	2650	4720	215	6-12	7000
	3500	2750	4920	215	6-12	7000
	4000	3050	5420	215	6-12	7000
	4500	3300	5920	215	6-12	7000
	5000	3550	6420	215	6-6	7000
	5500	3850	6920	215	3-6	6600
	6000	4100	7420	215	3-6	6400
Duplex	3000	2625	4420	1265	6-12	7000
	3300	2775	4720	1415	6-12	7000
	3500	2875	4920	1515	6-12	7000
	4000	3175	5420	1815	6-12	7000
	4500	3425	5920	2065	6-12	7000
Triplex	4000	2500	5400	1140	6-10	6200
	4350	2625	5750	1265	6-10	6200
	4800	2775	6200	1415	6-10	6200
	5000	2875	6400	1515	6-10	6200
	6000	3300	7400	1940	3-6	5500
	7000	3675	8400	2315	3-6	3700
	8000	4100	9400	2740	3-6	2300

(1) For height without backrest: -325mm (2) For free lift without backrest +325mm

DP80NH						
Mast Type	h3 mm	h1 mm	h4 mm	h2/h5 mm	Tilt angle Fwd/Bwd deg	Q @ c = 600mm kg
Simplex	3000	2700	4420	205	6-12	8000
	3300	2850	4720	205	6-12	8000
	3500	2950	4920	205	6-12	8000
	4000	3250	5420	205	6-12	8000
	4500	3500	5920	205	6-12	8000
	5000	3750	6420	205	6-6	7750
	5500	4050	6920	205	3-6	7400
	6000	4300	7420	205	3-6	7000
Duplex	3000	2700	4420	1345	6-12	8000
	3300	2850	4720	1495	6-12	8000
	3500	2950	4920	1595	6-12	8000
	4000	3250	5420	1895	6-12	8000
	4500	3500	5920	2145	6-12	8000
Triplex	4000	2575	5400	1220	6-10	7000
	4350	2700	5750	1345	6-10	7000
	4800	2850	6200	1495	6-10	7000
	5000	2950	6400	1595	6-10	7000
	6000	3375	7400	2020	3-6	6000
	7000	3750	8400	2395	3-6	4500
	8000	4175	9400	2820	3-6	2500

(1) For height without backrest: -205mm (2) For free lift without backrest +205mm

DP100NH						
Mast Type	h3 mm	h1 mm	h4 mm	h2/h5 mm	Tilt angle Fwd/Bwd deg	Q @ c = 600mm kg
Simplex	3000	2850	4330	205	6-12	10000
	3300	3000	4630	205	6-12	10000
	3500	3100	4830	205	6-12	10000
	4000	3400	5330	205	6-12	10000
	4500	3650	5830	205	6-12	10000
	5000	3900	6330	205	6-6	10000
	5500	4200	6830	205	3-6	9000
	6000	4450	7330	205	3-6	8000

Capacities at various load centres

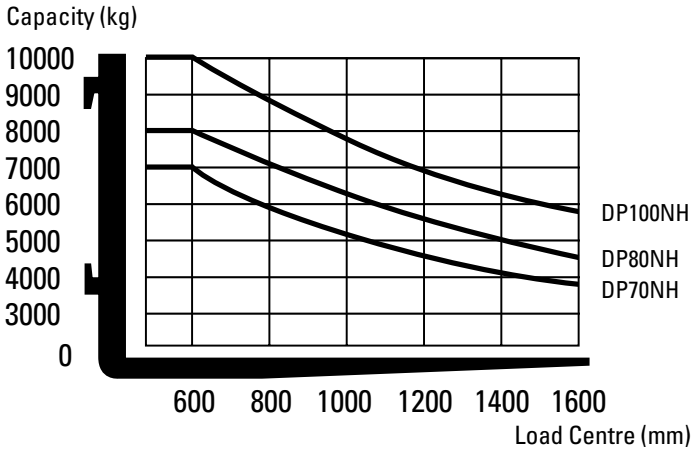

Mast Performance and Capacity

h1 Height with mast lowered
h2 Standard free lift
h3 Lift height
h4 Height with mast raised
h5 Full free lift
Q Lifting capacity, rated load
c Load centre (distance)

info@catlifttruck.com
www.catlifttruck.com

CESC1852AME-O(04/26)
© 2026 Logisnext Europe B.V. All rights reserved. CAT, CATERPILLAR, LET'S DO THE WORK, and their respective logos "Caterpillar Corporate Yellow", the "Power Edge" and Cat "Modern Hex" trade dress as well as corporate and product identity used herein are trademarks of Caterpillar used under license and may not be used without permission from Caterpillar. Specifications are indicative and may vary depending on operating conditions. Failure to assess all factors may result in performance deviations. All relevant sales support materials and technical expertise of the official distributor must be considered when identifying the best product/solution. Options and technical details may change without notice. Full legal notice and up-to-date product information: www.catlifttruck.com.