# DP/GP40NT - DP/GP45NT - DP/GP50CNT DP/GP50NT - DP/GP55NT

Specifications

**Engine powered lift trucks**

4.0 - 5.5 tonnes

| | Characteristics | | | | | | | |
|---|---|---|---|---|---|---|---|---|
| 1.1 | Manufacturer (abbreviation) | | Cat Lift Trucks | Cat Lift Trucks | Cat Lift Trucks | Cat Lift Trucks | Cat Lift Trucks | |
| 1.2 | Manufacturer's model designation | | **DP40NT** | **DP45NT** | **DP50CNT** | **DP50NT** | **DP55NT** | |
| 1.3 | Power source: (battery, diesel, LP gas, petrol) | | Diesel | Diesel | Diesel | Diesel | Diesel | |
| 1.4 | Operator type: pedestrian, (operator)-standing, -seated | | Seated | Seated | Seated | Seated | Seated | |
| 1.5 | Load capacity | Q (kg) | 4000 | 4500 | 5000 | 5000 | 5500 | |
| 1.6 | Load center distance | c (mm) | 500 | 500 | 500 | 600 | 600 | |
| 1.8 | Load distance, axle to fork face | x (mm) | 577 | 577 | 582 | 602 | 602 | |
| 1.9 | Wheelbase | y (mm) | 1850 | 2000 | 2000 | 2150 | 2150 | |
| | **Weight** | | | | | | | |
| 2.1 | Truck weight, without load / including battery (simplex mast, lowest lift height) | kg | 5920 | 6330 | 6850 | 7300 | 7640 | |
| 2.2 | Axle loading with maximum load, front/rear (simplex mast, lowest lift height) | kg | 8960/960 | 9710/1130 | 10600/1250 | 11020/1280 | 11740/1400 | |
| 2.3 | Axle loading without load, front/rear (simplex mast, lowest lift height) | kg | 2630/3290 | 2780/3550 | 2900/3950 | 3220/4080 | 3170/4470 | |
| | **Wheels, Drive Train** | | | | | | | |
| 3.1 | Tyres: V=solid, L=pneumatic, SE=solid pneumatic - front/rear | | L/L | L/L | L/L | L/L | SE/SE | |
| 3.2 | Tyre dimensions, front | | 8.25-15-14PR | 300-15-18PR | 300-15-18PR | 300-15-18PR | 300-15-18PR | |
| 3.3 | Tyre dimensions, rear | | 7.00-12-12PR | 7.00-12-12PR | 7.00-12-12PR | 7.00-12-14PR | 7.00-12-14PR | |
| 3.5 | Number of wheels, front/rear (x=driven) | | 2x/2 | 2x/2 | 2x/2 | 2x/2 | 2x/2 | |
| 3.6 | Track width (center of tyres), front | b10 (mm) | 1175 | 1175 | 1175 | 1175 | 1175 | |
| 3.7 | Track width (center of tyres), rear | b11 (mm) | 1180 | 1180 | 1180 | 1180 | 1180 | |
| | **Dimensions** | | | | | | | |
| 4.1 | Mast tilt, forwards/backwards | α/β ° | 6/12 | 6/12 | 6/12 | 6/12 | 6/12 | |
| 4.2 | Height with mast lowered (see tables) | h1 (mm) | 2320 | 2320 | 2400 | 2400 | 2400 | |
| 4.3 | Free lift (see tables) | h2 (mm) | 150 | 150 | 150 | 160 | 160 | |
| 4.4 | Lift height (see tables) | h3 (mm) | 3300 | 3300 | 3300 | 3300 | 3300 | |
| 4.5 | Overall height with mast raised | h4 (mm) | 4430 | 4430 | 4430 | 4430 | 4580 | |
| 4.7 | Height to top of overhead guard | h6 (mm) | 2250 | 2250 | 2250 | 2250 | 2250 | |
| 4.8 | Seat height | h7 (mm) | 1082 | 1082 | 1082 | 1082 | 1082 | |
| 4.12 | Tow coupling height | h10 (mm) | 395 | 395 | 395 | 395 | 395 | |
| 4.19 | Overall length | l1 (mm) | 4220 | 4350 | 4390 | 4530 | 4580 | |
| 4.20 | Length to fork face (includes fork thickness) | l2 (mm) | 3000 | 3130 | 3170 | 3310 | 3360 | |
| 4.21 | Overall width | b1/b2 (mm) | 1415/1965 | 1460/1965 | 1460/1965 | 1460/1965 | 1460/1965 | |
| 4.22 | Fork dimensions (thickness, width, length) | s, e, l (mm) | 50/150/1220 | 50/150/1220 | 50/150/1220 | 60/150/1220 | 60/150/1220 | |
| 4.23 | Fork carriage to DIN 15 173 A/B/no | | 3A | 3A | 3A | 4A | 4A | |
| 4.24 | Fork carriage width | b3 (mm) | 1190 | 1190 | 1190 | 1190 | 1190 | |
| 4.31 | Ground clearance under mast, with load | m1 (mm) | 150 | 150 | 150 | 150 | 150 | |
| 4.32 | Ground clearance at centre of wheelbase, with load (forks lowered) | m2 (mm) | 227 | 227 | 227 | 227 | 227 | |
| 4.33 | Working aisle width with 1000 x1200 mm pallets, crosswise | Ast (mm) | 4357 | 4507 | 4542 | 4692 | 4742 | |
| 4.34a | Working aisle width with 800 x1200 mm pallets, lengthwise | Ast (mm) | 4157 | 4307 | 4342 | 4492 | 4542 | |
| 4.35 | Turning circle radius | Wa (mm) | 2580 | 2730 | 2760 | 2890 | 2940 | |
| 4.36 | Minimum distance between centres of rotation | b13 (mm) | 836 | 903 | 903 | 971 | 971 | |
| | **Performance** | | | | | | | |
| 5.1 | Travel speed, with/without load | km/h | 21.5/22.0 | 21.0/22.0 | 21.0/22.0 | 21.0/22.0 | 21.0/22.0 | |
| 5.2 | Lifting speed, with/without load | m/s | 0.55/0.61 | 0.55/0.61 | 0.47/0.53 | 0.47/0.53 | 0.47/0.53 | |
| 5.3 | Lowering speed, with/without load | m/s | 0.5/0.5 | 0.5/0.5 | 0.5/0.5 | 0.5/0.5 | 0.5/0.5 | |
| 5.5 | Rated drawbar pull, with/without load (@1.6 km/h) | N | 27000/17400 | 27000/18700 | 26500/19400 | 26500/21800 | 26000/21300 | |
| 5.7 | Gradeability, with/without load (@1.6 km/h) | % | 29/26 | 26/27 | 24/26 | 23/27 | 21/25 | |
| 5.9 | Acceleration time (10 metres) with/without load | s | 4.20/3.70 | 4.52/3.87 | 4.52/3.87 | 4.52/3.87 | 4.52/3.87 | |
| 5.10 | Service brakes (mechanical/hydraulic/electric/pneumatic) | | Hydraulic | Hydraulic | Hydraulic | Hydraulic | Hydraulic | |
| | **IC Engine** | | | | | | | |
| 7.1 | Manufacturer / Type | | S6S | S6S | S6S | S6S | S6S | |
| 7.2 | Rated output to ISO 1585 (S.A.E. gross) | kW | 57.5 | 57.5 | 57.5 | 57.5 | 57.5 | |
| 7.3 | Rated speed to DIN 70 020 | rpm | 2300 | 2300 | 2300 | 2300 | 2300 | |
| 7.4 | Number of cylinders / cubic capacity | $cm^3$ | 6 / 4996 | 6 / 4996 | 6 / 4996 | 6 / 4996 | 6 / 4996 | |
| 7.5 | Fuel consumption according to VDI 60 cycle | l/h / kg/h | 7.9 / - | 8.1 / - | 8.2 / - | 8.7 / - | 8.9 / - | |
| 7.6 | Max torque (S.A.E. gross) @ engine speed | Nm / rpm | - | - | - | - | - | |
| | **Miscellaneous** | | | | | | | |
| 8.1 | Type of drive control | | Powershift 2/1 | Powershift 2/1 | Powershift 2/1 | Powershift 2/1 | Powershift 2/1 | |
| 8.2 | Maximum operating pressure for attachments | bar | 191 | 191 | 191 | 191 | 191 | |
| 8.3 | Oil flow for attachments | l/min | 80 | 80 | 80 | 80 | 80 | |
| 8.4 | Noise level, value at operator's ear (EN 12053) | dB(A) | 84 | 84 | 84 | 84 | 84 | |
| 8.5 | Towing coupling design / DIN type, ref. | | Pin | Pin | Pin | Pin | Pin | |

| | | | | | |
|---|---|---|---|---|---|
| | Cat Lift Trucks | Cat Lift Trucks | Cat Lift Trucks | Cat Lift Trucks | Cat Lift Trucks |
| | **GP40NT** | **GP45NT** | **GP50CNT** | **GP50NT** | **GP55NT** |
| | Petrol/LPG | Petrol/LPG | Petrol/LPG | Petrol/LPG | Petrol/LPG |
| | Seated | Seated | Seated | Seated | Seated |
| | 4000 | 4500 | 5000 | 5000 | 5500 |
| | 500 | 500 | 500 | 600 | 600 |
| | 577 | 577 | 582 | 602 | 602 |
| | 1850 | 2000 | 2000 | 2150 | 2150 |
| | | | | | |
| | 5860 | 6270 | 6780 | 7240 | 7570 |
| | 8940/920 | 9680/1090 | 10570/1210 | 10990/1250 | 11710/1360 |
| | 2610/3250 | 2750/3520 | 2870/3920 | 3190/4050 | 3130/4440 |
| | | | | | |
| | L/L | L/L | L/L | L/L | SE/SE |
| | 8.25-15-14PR | 300-15-18PR | 300-15-18PR | 300-15-18PR | 300-15/8.00 |
| | 7.00-12-14PR | 7.00-12-14PR | 7.00-12-14PR | 7.00-12-14PR | 7.00-12/5.00 |
| | 2x/2 | 2x/2 | 2x/2 | 2x/2 | 2x/2 |
| | 1175 | 1175 | 1175 | 1175 | 1175 |
| | 1180 | 1180 | 1180 | 1180 | 1180 |
| | | | | | |
| | 6/12 | 6/12 | 6/12 | 6/12 | 6/12 |
| | 2320 | 2320 | 2400 | 2400 | 2400 |
| | 150 | 150 | 150 | 160 | 160 |
| | 3300 | 3300 | 3300 | 3300 | 3300 |
| | 3920 | 3920 | 4000 | 4000 | 4000 |
| | 2250 | 2250 | 2250 | 2250 | 2250 |
| | 1082 | 1082 | 1082 | 1082 | 1082 |
| | 395 | 395 | 395 | 395 | 395 |
| | 4220 | 4350 | 4390 | 4530 | 4580 |
| | 3000 | 3130 | 3170 | 3310 | 3360 |
| | 1415/1965 | 1460/1965 | 1460/1965 | 1460/1965 | 1460/1965 |
| | 50/150/1220 | 50/150/1220 | 50/150/1220 | 60/150/1220 | 60/150/1220 |
| | 3A | 3A | 3A | 4A | 4A |
| | 1190 | 1190 | 1190 | 1190 | 1190 |
| | 150 | 150 | 150 | 150 | 150 |
| | 227 | 227 | 227 | 227 | 227 |
| | 4357 | 4507 | 4542 | 4692 | 4742 |
| | 4157 | 4307 | 4342 | 4492 | 4542 |
| | 2580 | 2730 | 2760 | 2890 | 2940 |
| | 836 | 903 | 903 | 971 | 971 |
| | | | | | |
| | 22.0/22.5 | 22.0/22.5 | 22.0/22.5 | 22.0/22.5 | 21.5/22.5 |
| | 0.57/0.60 | 0.57/0.60 | 0.49/0.52 | 0.49/0.52 | 0.49/0.52 |
| | 0.50/0.50 | 0.50/0.50 | 0.50/0.50 | 0.50/0.50 | 0.50/0.50 |
| | 28000/17200 | 27500/18500 | 27500/19200 | 27000/21600 | 27000/21000 |
| | 30/26 | 27/26 | 25/25 | 23/26 | 22/25 |
| | -/- | -/- | -/- | -/- | -/- |
| | Hydraulic | Hydraulic | Hydraulic | Hydraulic | Hydraulic |
| | | | | | |
| | GCT GK45 | GCT GK45 | GCT GK45 | GCT GK45 | GCT GK45 |
| | 72 | 72 | 72 | 72 | 72 |
| | 2450 | 2450 | 2450 | 2450 | 2450 |
| | 6 / 4452 | 6 / 4452 | 6 / 4452 | 6 / 4452 | 6 / 4452 |
| | - / 5.3 | - / 5.9 | - / 6.2 | - / 6.3 | - / 7.1 |
| | 288 / 1600 | 288 / 1600 | 288 / 1600 | 288 / 1600 | 288 / 1600 |
| | | | | | |
| | Powershift 2/1 | Powershift 2/1 | Powershift 2/1 | Powershift 2/1 | Powershift 2/1 |
| | 191 | 191 | 191 | 191 | 191 |
| | 80 | 80 | 80 | 80 | 80 |
| | 84 | 84 | 84 | 84 | 84 |
| | Pin | Pin | Pin | Pin | Pin |

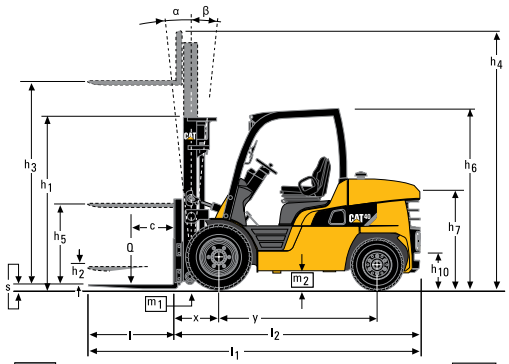


Ast = Wa + x + l6 + a
Ast = Working aisle width with load
a = Safety clearance (200 mm)
l6 = Pallet length (800 or 1000 mm)
b12 = Pallet width (1200 mm)

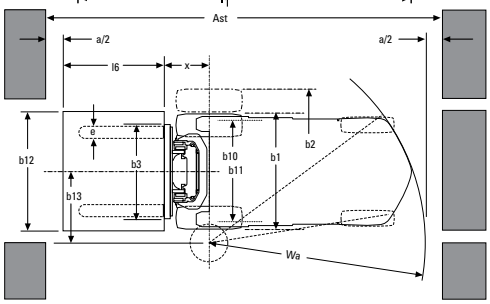


## Lower Cost of Ownership

- Easy-to-maintain drum brakes reduces down time.
- High positioned air intake system lengthens the life of air intake filter cartridges.
- LCD display with LED indicators, providing all safety functions, allows for rapid trouble shooting.
- Large diameter driving shafts for durability in the most demanding applications.
- Long service interval.
- Detailed diagnostics are possible for easy fault finding.
- Highly regarded, market proven industrial diesel and LPG engines give excellent performance.

## Unmatched Productivity

- Cooling system designed to reduce blockages utilising pusher type radiator airflow.
- Wide variety of mast types and lifting heights allows the truck to be specified to your needs.
- High capacity ratings.
- Full floating power line featuring two forward speeds and one speed reverse with high gradeability and travel speed.
- Hydrostatic steering system makes maneuvering the truck light and easy.

## Safety and Ergonomics

- PDS+, presence detection system disengages drive and hydraulic functions when the operator's seat is vacated.
- Electronic button operated parking brake for unblocked access.
- Operator identification system with Pin-code standard.
- Covered tilt cylinders, hoses and neat dashboard area.
- Hydraulic controlled drum brake system for safe operation.
- Open step frame and grab bar allow easy access.

## Options

- Pro-Shift transmission abuse protection system:
  - Auto deceleration; stops truck when accelerator is released.
  - Hill-hold; keeps truck stationary when it stops on ramps.
  - Controlled direction reversal; Truck decelerates to a suitable speed before changing direction, protecting the drive train.
- Wet disc brakes.
- Handgrip on overhead guard with a horn button helps to reduce back strain and fatigue in applications with repetitive reversing.
- Load indicator on Simplex masts.
- Dust screen.

# Cat® Lift Trucks.

## Your partner in materials handling.

| DP/GP40NT - DP/GP45NT | | | | | DP/GP40NT PNEUMATIC | | DP/GP45NT PNEUMATIC | | DP/GP40NT SOLID PNEUMATIC | | DP/GP45NT SOLID PNEUMATIC | |
|---|---|---|---|---|---|---|---|---|---|---|---|---|
| Mast Type | h3 mm | h1 mm | h4 mm | h2/h5 mm | Q @ c = 500mm kg | Q @ c = 600mm kg | Q @ c = 500mm kg | Q @ c = 600mm kg | Q @ c = 500mm kg | Q @ c = 600mm kg | Q @ c = 500mm kg | Q @ c = 600mm kg |
| Simplex | 3000 | 2170 | 4130 | 150 | 4000 | 3500 | 4500 | 4000 | 4000 | 3500 | 4500 | 4000 |
| | 3300 | 2320 | 4430 | 150 | 4000 | 3500 | 4500 | 4000 | 4000 | 3500 | 4500 | 4000 |
| | 3700 | 2520 | 4830 | 150 | 4000 | 3500 | 4500 | 4000 | 4000 | 3500 | 4500 | 4000 |
| | 4000 | 2700 | 5130 | 150 | 4000 | 3500 | 4500 | 4000 | 4000 | 3500 | 4500 | 4000 |
| | 4500 | 3000 | 5630 | 150 | 4000 | 3500 | 4500 | 4000 | 4000 | 3500 | 4500 | 4000 |
| | 5000 | 3250 | 6130 | 150 | 3850 | 3500 | 4500 | 4000 | 4000 | 3500 | 4500 | 4000 |
| | 5500 | 3500 | 6630 | 150 | 3600 | 3400* | 4300* | 4000* | 3700 | 3500 | 4400 | 4000 |
| | 6000 | 3750 | 7130 | 150 | 3500* | 3300* | 3900* | 3900* | 3600 | 3400 | 4250 | 3900 |
| Duplex | 3000 | 2170 | 4130 | 1090 | 4000 | 3500 | 4500 | 4000 | 4000 | 3500 | 4500 | 4000 |
| | 3300 | 2320 | 4430 | 1240 | 4000 | 3500 | 4500 | 4000 | 4000 | 3500 | 4500 | 4000 |
| | 3700 | 2520 | 4830 | 1440 | 4000 | 3500 | 4500 | 4000 | 4000 | 3500 | 4500 | 4000 |
| | 4100 | 2700 | 5190 | 1620 | 4000 | 3500 | 4500 | 4000 | 4000 | 3500 | 4500 | 4000 |
| Triplex | 3700 | 1950 | 4830 | 870 | 4000 | 3500 | 4500 | 4000 | 4000 | 3500 | 4500 | 4000 |
| | 4000 | 2050 | 5130 | 970 | 4000 | 3500 | 4500 | 4000 | 4000 | 3500 | 4500 | 4000 |
| | 4360 | 2170 | 5490 | 1090 | 4000 | 3500 | 4500 | 4000 | 4000 | 3500 | 4500 | 4000 |
| | 4700 | 2285 | 5830 | 1200 | 3900 | 3500 | 4500 | 4000 | 4000 | 3500 | 4500 | 4000 |
| | 5050 | 2400 | 6180 | 1320 | 3800 | 3500 | 4500 | 4000 | 3900 | 3500 | 4500 | 4000 |
| | 5500 | 2550 | 6630 | 1470 | 3600* | 3400* | 4200* | 4000* | 3700 | 3450 | 4350 | 4000 |
| | 6000 | 2750 | 7130 | 1670 | 3450* | 3250* | 4050* | 3800* | 3550 | 3300 | 4200 | 3900 |
| | 6500 | 2950 | 7630 | 1870 | 3000* | 3000* | 3000* | 3000* | 3350 | 3200 | 4050* | 3800* |
| | 7000 | 3150 | 8130 | 2070 | 2400* | 2400* | 2400* | 2400* | 3300* | 3100* | 3500* | 3500* |

## Mast Performance and Capacity

h1 Height with mast lowered
h2 Standard free lift
h3 Lift height
h4 Height with mast raised
h5 Full free lift
Q Lifting capacity, rated load
c Load centre (distance)

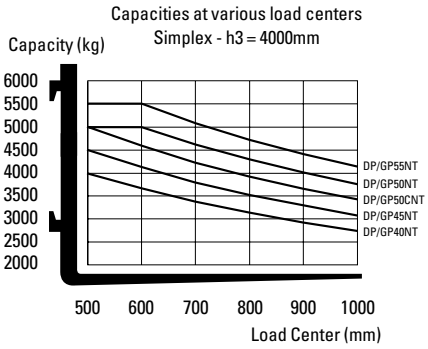


| DP/GP50CNT | | | | | DP/GP50CNT PNEUMATIC | | DP/GP50CNT SOLID PNEUMATIC | |
|---|---|---|---|---|---|---|---|---|
| Mast Type | h3 mm | h1 mm | h4 mm | h2/h5 mm | Q @ c = 500mm kg | Q @ c = 600mm kg | Q @ LC= 500mm kg | Q @ c = 600mm kg |
| Simplex | 3000 | 2250 | 4130 | 150 | 5000 | 4500 | 5000 | 4500 |
| | 3300 | 2400 | 4430 | 150 | 5000 | 4500 | 5000 | 4500 |
| | 3700 | 2600 | 4830 | 150 | 5000 | 4500 | 5000 | 4500 |
| | 4000 | 2850 | 5130 | 150 | 5000 | 4500 | 5000 | 4500 |
| | 4500 | 3100 | 5630 | 150 | 5000 | 4500 | 5000 | 4500 |
| | 5000 | 3350 | 6130 | 150 | 5000 | 4500 | 5000 | 4500 |
| | 5500 | 3600 | 6630 | 150 | 4750* | 4500* | 4850 | 4500 |
| | 6000 | 3850 | 7130 | 150 | 3900* | 3900* | 4700 | 4400 |
| Duplex | 2970 | 2250 | 4100 | 1170 | 5000 | 4500 | 5000 | 4500 |
| | 3300 | 2400 | 4410 | 1320 | 5000 | 4500 | 5000 | 4500 |
| | 4100 | 2850 | 5210 | 1770 | 5000 | 4500 | 5000 | 4500 |
| Triplex | 3700 | 2050 | 4830 | 970 | 5000 | 4500 | 5000 | 4500 |
| | 4040 | 2170 | 5170 | 1090 | 5000 | 4500 | 5000 | 4500 |
| | 4310 | 2260 | 5440 | 1180 | 5000 | 4500 | 5000 | 4500 |
| | 4750 | 2400 | 5880 | 1320 | 5000 | 4500 | 5000 | 4500 |
| | 5050 | 2500 | 6180 | 1420 | 5000 | 4500 | 5000 | 4500 |
| | 5500 | 2650 | 6630 | 1570 | 4700* | 4450* | 4800 | 4500 |
| | 6000 | 2850 | 7130 | 1770 | 4200* | 4200* | 4600 | 4350 |
| | 6500 | 3050 | 7630 | 1970 | 3000* | 3000* | 4450* | 4200* |
| | 7000 | 3250 | 8130 | 2170 | 2400* | 2400* | 3500* | 3500* |

| DP/GP50NT - DP/GP55NT | | | | | DP/GP50NT PNEUMATIC | DP/GP55NT PNEUMATIC | DP/GP50NT SOLID PNEU. | DP/GP55NT SOLID PNEU. |
|---|---|---|---|---|---|---|---|---|
| Mast Type | h3 mm | h1 mm | h4 mm | h2/h5 mm | Q @ c = 600mm kg | Q @ c = 600mm kg | Q @ c = 600mm kg | Q @ c = 600mm kg |
| Simplex | 3000 | 2250 | 4280 | 160 | 5000 | 5500 | 5000 | 5500 |
| | 3300 | 2400 | 4580 | 160 | 5000 | 5500 | 5000 | 5500 |
| | 3700 | 2600 | 4980 | 160 | 5000 | 5500 | 5000 | 5500 |
| | 4000 | 2850 | 5280 | 160 | 5000 | 5500 | 5000 | 5500 |
| | 4500 | 3100 | 5780 | 160 | 5000 | 5500 | 5000 | 5500 |
| | 5000 | 3350 | 6280 | 160 | 5000 | 5500* | 5000 | 5500 |
| | 5500 | 3600 | 6780 | 160 | 4900* | (4650)* | 5000 | 5500 |
| | 6000 | 3850 | 7280 | 160 | 4100* | (3450)* | 4900 | 5350* |
| Duplex | 3000 | 2250 | 4250 | 1030 | 5000 | 5500 | 5000 | 5500 |
| | 3300 | 2400 | 4560 | 1180 | 5000 | 5500 | 5000 | 5500 |
| | 4100 | 2850 | 5360 | 1630 | 5000 | 5500 | 5000 | 5500 |
| Triplex | 3700 | 2050 | 4980 | 830 | 5000 | 5500 | 5000 | 5500 |
| | 4040 | 2170 | 5320 | 950 | 5000 | 5500 | 5000 | 5500 |
| | 4310 | 2260 | 5590 | 1040 | 5000 | 5500 | 5000 | 5500 |
| | 4750 | 2400 | 6030 | 1180 | 5000 | 5450 | 5000 | 5500 |
| | 5050 | 2500 | 6330 | 1280 | 5000 | 5500* | 5000 | 5500 |
| | 5500 | 2650 | 6780 | 1430 | 4900* | (4850)* | 5000 | 5500 |
| | 6000 | 2850 | 7280 | 1630 | 4300* | (3500)* | 4800 | 5300* |
| | 6500 | 3050 | 7780 | 1830 | 3150* | (2600)* | 4650* | (4400)* |
| | 7000 | 3250 | 8280 | 2030 | 2500* | (2000)* | 3900* | (3050)* |

* Truck equipped with dual tyres. Consult your dealer for maximum back-tilt allowed, to obtain the capacities specified.

() Capacities shown in brackets for the 5.5 tonnes model show lower capacities compared to 5.0 tonne model.


**info@catlifttruck.com**
**www.catlifttruck.com**



CESC1888AME-D(04/26)



© 2026 Logisnext Europe B.V. All rights reserved. CAT, CATERPILLAR, LET'S DO THE WORK, and their respective logos "Caterpillar Corporate Yellow", the "Power Edge" and Cat "Modern Hex" trade dress as well as corporate and product identity used herein are trademarks of Caterpillar used under license and may not be used without permission from Caterpillar. Specifications are indicative and may vary depending on operating conditions. Failure to assess all factors may result in performance deviations. All relevant sales support materials and technical expertise of the official distributor must be considered when identifying the best product/solution. Options and technical details may change without notice. Full legal notice and up-to-date product information: www.catlifttruck.com.