EP13TCB - EP15TCB - EP16T(B)CB EP18T(B)CB - EP20T(B)CB

Preliminary Specifications

Electric powered lift trucks

3 wheel 48V, 1.3 - 2.0 tonnes

	Characteristics							
1.1	Manufacturer (abbreviation)		Cat Lift Trucks	Cat Lift Trucks	Cat Lift Trucks	Cat Lift Trucks	Cat Lift Trucks	
1.2	Manufacturer's model designation		**EP13TCB**	**EP15TCB**	**EP16TCB**	**EP18TCB**	**EP20TCB**	
1.3	Power source: (battery, diesel, LP gas, petrol)		Electric	Electric	Electric	Electric	Electric	
1.4	Operator type: pedestrian, (operator)-standing, -seated		Seated	Seated	Seated	Seated	Seated	
1.5	Load capacity	Q (kg)	1300	1500	1600	1800	2000	
1.6	Load centre distance	c (mm)	500	500	500	500	500	
1.8	Load distance, axle to fork face	x (mm)	375	375	375	375	415	
1.9	Wheelbase	y (mm)	1220	1320	1415	1415	1415	
	Weight							
2.1	Truck weight, without load / including battery (simplex mast, lowest lift height)	kg	2625	2700	2675	2870	2345	
2.2	Axle loading with maximum load, front/rear (simplex mast, lowest lift height)	kg	3460/465	3735/455	3820/445	4155/515	4650/595	
2.3	Axle loading without load, front/rear (simplex mast, lowest lift height)	kg	1230/1395	1245/1445	1235/1430	1245/1625	1355/1890	
	Wheels, Drive Train							
3.1	Tyres: V=solid, L=pneumatic, SE=solid pneumatic - front/rear		L / L	L / L	L / L	L / L	SE / L	
3.2	Tyre dimensions, front		18x7-8-14PR	18x7-8-14PR	18x7-8-16PR	18x7-8-16PR	18x7-8 (N.P.)*	
3.3	Tyre dimensions, rear		15x4 1/2-8-12PR	15x4 1/2-8-12PR	15x4 1/2-8-12PR	16x6-8-10PR	16x6-8-10PR	
3.5	Number of wheels, front/rear (x=driven)		2x / 2	2x / 2	2x / 2	2x / 2	2x / 2	
3.6	Track width (centre of tyres), front	b10 (mm)	920	920	920	920	920	
3.7	Track width (centre of tyres), rear	b11 (mm)	250	250	250	230	230	
	Dimensions							
4.1	Mast tilt, forwards/backwards	∂/ß °	5 / 7.5	5 / 7.5	5 / 7.5	5 / 7.5	5 / 7.5	
4.2	Height with mast lowered (see tables)	h1 (mm)	1975	1975	1975	1975	1975	
4.3	Free lift (see tables)	h2 (mm)	115	115	115	115	120	
4.4	Lift height (see tables)	h3 (mm)	3000	3000	3000	3000	3000	
4.5	Overall height with mast raised	h4 (mm)	4015	4015	4015	4015	4000	
4.7	Height to top of overhead guard	h6 (mm)	2050	2050	2050	2050	2050	
4.8	Seat height	h7 (mm)	955	955	955	955	955	
4.12	Tow coupling height	h10 (mm)	575	575	575	575	575	
4.19	Overall length	l1 (mm)	2855	2955	3050	3105	3175	
4.20	Length to fork face (includes fork thickness)	l2 (mm)	1785	1885	1980	2035	2105	
4.21	Overall width	b1/b2 (mm)	1090	1090	1090	1090	1090	
4.22	Fork dimensions (thickness, width, length)	s, e, l (mm)	35x100x1070	35x100x1070	35x100x1070	35x100x1070	40x122x1070	
4.23	Fork carriage to DIN 15 173 A/B/no		2A	2A	2A	2A	2A	
4.24	Fork carriage width	b3 (mm)	920	920	920	920	1000	
4.31	Ground clearance under mast, with load	m1 (mm)	85	85	85	85	85	
4.32	Ground clearance at centre of wheelbase, with load (forks lowered)	m2 (mm)	85	85	85	85	85	
4.33	Working aisle width with 1000 x1200 mm pallets, crosswise	Ast (mm)	3110	3210	3305	3360	3430	
4.34a	Working aisle width with 800 x1200 mm pallets, lengthwise	Ast (mm)	3235	3335	3430	3485	3555	
4.35	Turning circle radius	Wa (mm)	1410	1510	1605	1660	1690	
4.36	Minimum distance between centres of rotation	b13 (mm)	0	0	0	0	0	
	Performance							
5.1	Travel speed, with/without load	km/h	15 / 16.5	15 / 16.5	14.5 / 16.0	14.5 / 16	14 / 15.5	
5.2	Lifting speed, with/without load	m/s	0,40 / 0,61	0,38 / 0,61	0.36 / 0.61	0,36 / 0,61	0,30 / 0,50	
5.3	Lowering speed, with/without load	m/s	0.55 / 0.50	0.55 / 0.50	0.55 / 0.50	0.55 / 0.50	0.55 / 0.50	
5.5	Rated drawbar pull, with/without load	N	N/A / 3180	N/A / 3120	N/A / 3080	N/A / 2190	N/A / 2080	
5.6	Maximum drawbar pull, with/without load (5 min short duty)	N	N/A / 7530	N/A / 7390	N/A / 6910	N/A / 7530	N/A / 7550	
5.7	Gradeability, with/without load	%	8/13	7.5/12.5	7/12.5	4.5/8.5	4.0/7.0	
5.8	Maximum gradeability, with/without load	%	20/20	18/20	15/20	15/20	14/17	
5.9	Acceleration time (10 metres) with/without load	s	4.7/4.2	4.7/4.0	4.7/4.1	4.7/4.1	4.9/4.1	
5.10	Service brakes (mechanical/hydraulic/electric/pneumatic)		Hydraulic	Hydraulic	Hydraulic	Hydraulic	Hydraulic	
	Electric motors							
6.1	Drive motor capacity (60 min. short duty)	kW	2 x 4,5	2 x 4,5	2 x 4.5	2 x 4,5	2 x 4,5	
6.2	Lift motor output at 15% duty factor	kW	9,5	9,5	9.5	9,5	9,5	
6.3	Battery to DIN 43 531/35/36 A/B/C/no		- BS/JS	- BS/JS	- BS/JIS	- BS/JS	- BS/JS	
6.4	Battery voltage/capacity at 5-hour discharge	V /Ah	48V / 320Ah	48V / 350Ah	48V / 350Ah	48V / 390Ah	48V / 390Ah	
6.5	Battery weight	kg	550	595	595	650	650	
6.6	Energy consumption according to VDI 60 cycle	kWh/h	N/A	N/A	N/A	N/A	N/A	
	Miscellaneous							
8.1	Type of drive control		FET	FET	FET	FET	FET	
8.2	Operating pressure for attachments	bar	137	137	157	157	181	
8.3	Oil flow for attachments	l/min	60	60	60	60	50	
8.4	Noise level, value at operator's ear (EN 12053)	dB(A)	< 75	< 75	< 75	< 75	< 75	
8.5	Towing coupling design / DIN type, ref.		N/A	N/A	N/A	N/A	N/A	

Cat Lift Trucks	Cat Lift Trucks	Cat Lift Trucks
EP16TBCB	**EP18TBCB**	**EP20TBCB**
Electric	Electric	Electric
Seated	Seated	Seated
1600	1800	2000
500	500	500
375	375	415
1525	1525	1525
3050	3300	3405
4020/630	4315/785	4815/590
1505/1545	1485/1815	1615/1790
L / L	L / L	SE / L
18x7-8-16PR	18x7-8-16PR	18x7-8 (N.P.)*
15x4 1/2-8-12PR	16x6-8-10PR	16x6-8-10PR
2x / 2	2x / 2	2x / 2
920	920	920
250	230	230
5 / 7.5	5 / 7.5	5 / 7.5
1975	1975	1975
115	115	120
3000	3000	3000
4015	4015	4000
2050	2050	2050
955	955	955
575	575	575
3160	3215	3255
2090	2145	2185
1090	1090	1090
35x100x1070	35x100x1070	40x122x1070
2A	2A	2A
920	920	1000
85	85	85
85	85	85
3415	3470	3507
3540	3595	3635
1715	1770	1770
0	0	0
14.5 / 16.0	14.5 / 16.0	14 / 15.5
0.36 / 0.61	0.36 / 0.61	0.30 / 0.50
0.55 / 0.50	0.55 / 0.50	0.55 / 0.50
N/A /3020	N/A / 2130	N/A / 2010
N/A / 6910	N/A / 7530	N/A / 7550
6.5/11	4.0/7.0	3.5/6.5
15/20	15/20	14/17
4.8/4.2	4.9/4.2	4.9/4.1
Hydraulic	Hydraulic	Hydraulic
2 x 4.5	2 x 4.5	2 x 4.5
9.5	9.5	9.5
- BS/JIS	- BS/JIS	- BS/JIS
48V /730Ah	48V /730Ah	48V /730Ah
1120	1120	1120
N/A	N/A	N/A
FET	FET	FET
157	157	181
60	60	50
< 75	< 75	< 75
N/A	N/A	N/A

Ast = Wa + R + a
Ast = Working aisle width with load
Wa = Turning radius
a = Safety clearance (200 mm)
R = $\sqrt{(l6 + x)^2 + (b12 / 2)^2}$
l6 = Pallet length (800 or 1000 mm)
b12 = Pallet width (1200 mm)

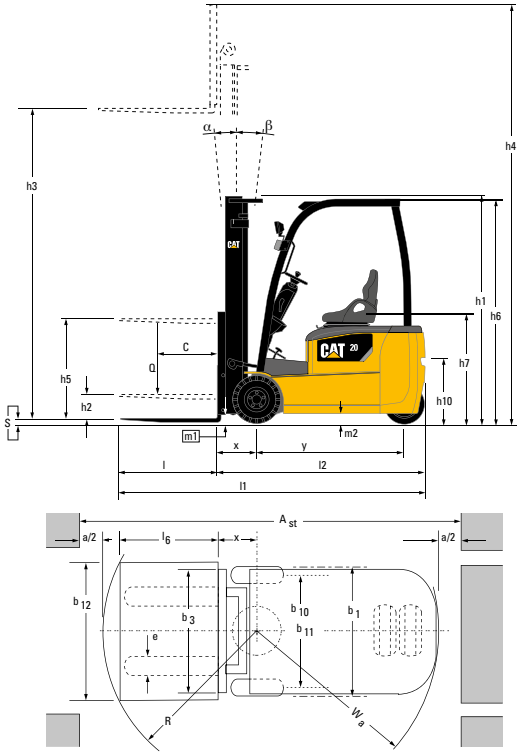

Lower Cost of Ownership

- Advanced AC motor technology provides high torque, faster acceleration, better ramp performance and smooth, quiet, controlled operation.
- AC controller provides optimum performance and energy efficiency.
- Auto power-off mode automatically shuts off forklift after truck remains unused after 15 minutes.
- 4 modes of Regenerative braking increase battery life, productivity, performance and reduce brake wear.
- Wet Disc Brake with powerful braking effect, extends battery life, reduces brake wear and low maintenance (1200hrs oil replacement).
- Rapid trouble shooting with on-board diagnostics and fault memory folder, preventing damage and minimising downtime.

Unmatched Productivity

- Electric Power Steering for effortless maneuverability.
- Pitching Control System reduces cargo vibration or swaying when going over humps or travelling on uneven surfaces.
- Vacuum Fluorescent Display (VFD) Instrumentation panel keeps driver informed of truck hours and state of battery, even in bright daylight.
- Eight drive modes and three acceleration modes give superior performance in demanding applications, whilst providing optimal energy savings.
- Self-diagnostic function display icon or message including fault history folder allows service engineer to facilitate maintenance.

Safety and Ergonomics

- High visibility mast and overhead guard.
- Back up alarm supplied as standard.
- Presence Detection System (PDS) protects operator, pedestrians and loads by disengaging drive and hydraulic functions when the operator leaves the seated operating position.
- Wide tread dual rear wheels design increase truck stability.
- IPX4 waterproofing rating.
- New generation AC controller ensure lowest noise level in its class.
- Ergonomically designed operator's compartment features a full suspension seat, adjustable steering column and comfortably placed hydraulic control levers.
- On demand electric power steering gives effortless control and smoother maneuverability while achieving exceptionally low energy consumption. No hydraulics are involved meaning no oil leakage, less maintenance and no distracting motor sound.
- Low footstep and well-placed grab bar makes on/off access easy - even in repetitive situations.
- Controlled roll down and excellent ramp performance allow safe and efficient operation.

Options

- Horizontal tilt display on monitor.
- Rust resistance upgrade.
- No puncture super elastic tyres.
- Cold storage specification.
- Laser pointer to indicate fork insertion position.
- Side shifter.

Cat® Lift Trucks.

Your partner in materials handling.

EP13-20TCB						EP13TCB		EP15TCB		EP16TCB		EP18TCB		EP16TBCB		EP18TBCB	
Mast Type	h3 mm	h1 mm	h4 mm	h2/h5* mm	Tilt angle (fwd-rev)	Q @ c=500mm kg		Q @ c=500mm kg		Q @ c=500mm kg		Q @ c=500mm kg		Q @ c=500mm kg		Q @ c=500mm kg	
						Pneumatic	Solid	Pneumatic	Solid	Pneumatic	Solid	Pneumatic	Solid	Pneumatic	Solid	Pneumatic	Solid
Simplex	3000	1975	4015	115	5-7.5	1300	1300	1500	1500	1600	1600	1800	1800	1600	1600	1800	1800
	3300	2125	4315	115	5-7.5	1300	1300	1500	1500	1570	1570	1800	1800	1600	1600	1800	1800
	3500	2225	4515	115	5-7.5	1300	1300	1500	1500	1550	1550	1770	1770	1600	1600	1800	1800
	3700	2325	4715	115	5-7.5	1270	1270	1500	1500	1530	1530	1730	1750	1600	1600	1800	1800
	4000	2525	5015	115	5-7.5	1200	1230	1400	1450	1450	1470	1630	1670	1600	1600	1800	1800
	4500	2775	5515	115	3-6	1130	1150	1250	1350	1270	1370	1400	1600	1430	1600	1500	1800
	5000	3035	6015	115	3-6	900	1070	1050	1250	1070	1270	1150	1450	1130	1450	1170	1500
Duplex	3000	1975	4015	960	5-6	1300	1300	1500	1500	1600	1600	1800	1800	1600	1600	1800	1800
	3300	2125	4315	1110	5-6	1270	1270	1500	1500	1550	1550	1800	1800	1600	1600	1800	1800
	3500	2225	4515	1210	5-6	1270	1270	1500	1500	1530	1530	1770	1770	1600	1600	1800	1800
	3700	2325	4715	1310	5-6	1270	1270	1500	1500	1530	1530	1730	1750	1600	1600	1800	1800
	4000	2525	5015	1510	5-6	1200	1230	-	-	1430	1470	1630	1670	1600	1600	1800	1800
Triplex	3700	1775	4715	760	5-6	1230	1270	-	-	1470	1530	1630	1750	1600	1600	1800	1800
	4000	1875	5015	860	5-6	1170	1230	-	-	1400	1470	1570	1670	1570	1600	1800	1800
	4300	1975	5315	960	3-6	1130	1170	1250	1400	1330	1430	1470	1630	1530	1550	1700	1800
	4500	2045	5515	1030	3-6	1070	1150	1200	1350	1270	1370	1350	1570	1470	1530	1530	1750
	4700	2125	5715	1110	3-6	1050	1130	1150	1300	1200	1330	1270	1530	1300	1500	1350	1700
	5000	2225	6015	1210	3-6	900	1070	1000	1250	1030	1270	1100	1470	1130	1450	1170	1530
	5500	2415	6515	1400	1.5-5	700	950	770	1100	800	1130	850	1150	800	1130	850	1150
	6000	2595	7015	1580	1.5-5	500	670	550	700	570	730	600	750	570	730	600	750
	6500	2835	7515	1820	1.5-4	370	450	400	470	430	500	450	530	430	500	450	530
	7000	3035	8015	2020	1.5-4	250	300	270	330	300	350	330	370	300	350	330	370

Mast Performance and Capacity

h1 Height with mast lowered
h2 Standard free lift
h3 Lift height
h4 Height with mast raised
h5 Full free lift
Q Lifting capacity, rated load
c Load centre (distance)

Consult your dealer for the maximum back tilt allowed, to obtain the capacities specified.

* h5 including load backrest (without load backrest increase with 305 mm (duplex) or 465 (triplex)).

EP13-20TCB						EP20TCB	EP20TBCB
Mast Type	h3 mm	h1 mm	h4 mm	h2/h5** mm	Tilt angle (fwd-rev)	Q @ c=500mm kg	Q @ c=500mm kg
						Solid	Solid
Simplex	3000	1975	4000	120	6-12	2000	2000
	3300	2125	4300	120	6-12	2000	2000
	3500	2225	4500	120	6-12	2000	2000
	3700	2325	4700	120	6-12	2000	2000
	4000	2525	5000	120	6-12	2000	2000
	4500	2775	5500	120	4-6	1800	1830
	5000	3035	6000	120	4-6	1600	1630
Duplex	3000	1975	4000	975	5-6	2000	2000
	3300	2125	4300	1125	5-6	2000	2000
	3500	2225	4500	1225	5-6	2000	2000
	3700	2325	4700	1325	5-6	2000	2000
	4000	2525	5000	1525	5-6	2000	2000
Triplex	3700	1775	4700	775	5-6	1950	1950
	4000	1875	5000	875	5-6	1930	1930
	4300	1975	5300	975	3-6	1850	1850
	4500	2045	5500	1045	3-6	1800	1800
	4700	2125	5700	1125	3-6	1730	1730
	5000	2225	6000	1225	3-6	1600	1600
	5500	2415	6500	1415	1.5-5	1170	1170
	6000	2595	7000	1595	1.5-5	770	770
	6500	2835	7500	1835	1.5-4	550	550
	7000	3035	8000	2035	1.5-4	400	400

** h5 including load backrest (without load backrest increase with 370 mm (duplex and triplex)).

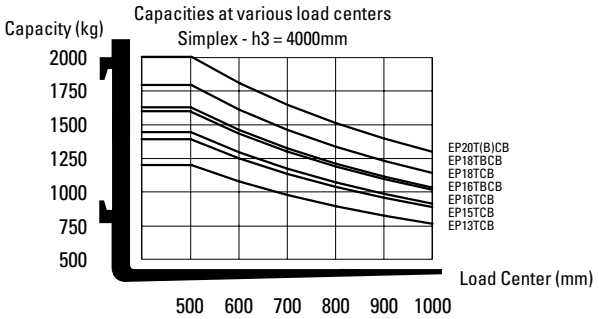

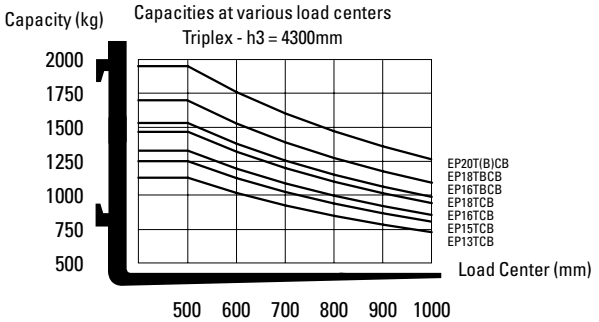

catlifttruck@mcfe.nl
www.catlifttruck.com

CESC1586AME-T(04/26)
© 2026 Logisnext Europe B.V. All rights reserved. CAT, CATERPILLAR, LET'S DO THE WORK, and their respective logos "Caterpillar Corporate Yellow", the "Power Edge" and Cat "Modern Hex" trade dress as well as corporate and product identity used herein are trademarks of Caterpillar used under license and may not be used without permission from Caterpillar. Specifications are indicative and may vary depending on operating conditions. Failure to assess all factors may result in performance deviations. All relevant sales support materials and technical expertise of the official distributor must be considered when identifying the best product/solution. Options and technical details may change without notice. Full legal notice and up-to-date product information: www.catlifttruck.com.