UNCOMPROMISING PERFORMANCE...

DP40N3
DP45N3
DP50CN3
DP50N3
DP55N3

GP40N3
GP45N3
GP50CN3
GP50N3
GP55N3

SPECIFICATIONS

ENGINE POWERED LIFT TRUCKS 4.0 - 5.5 TONNES

UNCOMPROMISING PERFORMANCE...

THESE LARGER ENGINE-POWERED MODELS ARE DESIGNED FOR HEAVY DUTY APPLICATIONS AND ARE THE NATURAL CHOICE FOR USE IN PORTS, CONSTRUCTION SITES, FREIGHT FACILITIES, AND METAL AND BRICK OPERATIONS.

In the diesel-powered models, the tough, electronically controlled common rail Stage V engine allows each cylinder to work at peak efficiency regardless of load and speed. It also contributes to the truck's exceptionally low noise, vibrations, emissions and fuel consumption.

The GP40-GP55N3 models are equipped with a GCT GK45 LPG engine with standard catalytic converter that delivers good performance, excellent fuel economy and low emissions, as well as low noise and vibration levels.

The compact, smooth lines of each model enable easy manoeuvring in confined spaces whilst ensuring good visibility.

The capabilities of the range are further boosted by a wide array of options that enable you to fine-tune each truck to your work requirements.

LOWER COST OF OWNERSHIP

- Specially positioned air intake system lengthens the life of air intake filter cartridges.
- LCD multifunctional display with indicators providing soot status (diesel) and all safety functions allows for rapid troubleshooting.
- Long service interval reduces maintenance costs and downtime.
- Durable transmission system gives smooth, accurate gear changes and low noise levels.
- Highly regarded, market-proven industrial diesel Stage V and LPG engines give excellent performance.
- LED front and rear combination lights reduce energy consumption and maintenance needs.

UNMATCHED PRODUCTIVITY

- Engine hour meter keeps track of hours worked, helping fleet managers to schedule regular maintenance.
- Compact truck design increases manoeuvrability in areas with restricted space.
- Cooling system designed to reduce blockages utilising pusher type radiator airflow.
- Wide variety of mast types and lifting heights allows the truck to be specified to your needs.
- Full floating powertrain, with two forward speeds and one reverse speed, delivers high gradeability and fast travel.
- Hydrostatic steering system makes manoeuvring the truck light and easy.
- Optional factory-fitted panel cabin keeps the elements out, without compromising visibility, combining form and function in a design which keeps the truck performing in the most extreme of temperatures and in wet environments.

SAFETY AND ERGONOMICS

- PDS+ Presence Detection System disengages drive and hydraulic functions when the operator's seat is vacated.
- Ground speed control feature limits truck's top speed.
- Electronic button-operated parking brake is convenient and safe.
- Ergonomically shaped Grammer seat with back cushion is designed for optimal lateral support and driver comfort.
- Hydraulically controlled drum brake system gives increased safety.
- Adjustable steering column enables comfortable operation.

STANDARD EQUIPMENT AND OPTIONS

	DIESEL				LP GAS			
GENERAL	**DP40-45N3**	**DP50CN3**	**DP50N3**	**DP55N3**	**GP40-45N3**	**GP50CN3**	**GP50N3**	**GP55N3**
Dust proof kit	○	○	○	○	○	○	○	○
Line filter for torque converter	○	○	○	○	○	○	○	○
LPG bracket removed	–	–	–	–	○	○	○	○
Rear axle under guard	○	○	○	○	○	○	○	○
Tilt cylinder boot kit	○	○	○	○	○	○	○	○
Lifting eyes mounted on counter weight	○	○	○	○	–	–	–	–
Belly plate (under cover)	○	○	○	○	●	●	●	●
Dust proof strainer	○	○	○	○	○	○	○	○
Hydraulic oil cooler	○	○	○	○	○	○	○	○
HYDRAULIC								
3-way control valve MC	●	●	●	●	●	●	●	●
3-way control valve FC	○	○	○	○	○	○	○	○
4-way control valve MC	○	○	○	○	○	○	○	○
4-way control valve FC	○	○	○	○	○	○	○	○
MAST, FORKS AND CARRIAGE								
Loose mast	○	○	○	○	○	○	○	○
Lifting eye for mast	○	○	○	○	○	○	○	○
Uninstalled mast	○	○	○	○	○	○	○	○
Side shifter 1190 mm	○	○	○	○	○	○	○	○
Side shifter 1500 mm* (*Note: Requires Carriage 1500mm)	○	○	○	○	○	○	○	○
Integral side shifter 1190mm	○	○	○	○	○	○	○	○
Fork deletion	○	○	○	○	○	○	○	○
ELECTRIC								
Backup handle with horn button	●	●	●	●	●	●	●	●
Electric diesel control (Diesel)	●	●	●	●	–	–	–	–
Speed control system (LPG)	–	–	–	–	○	○	○	○
Indicator kit	○	○	○	○	○	○	○	○
LED light set	●	●	●	●	●	●	●	●
LED rear work light	○	○	○	○	○	○	○	○
Load weight indicator (for simplex & triplex masts)	●	●	●	●	●	●	●	●
Rotating beacon (orange)	○	○	○	○	○	○	○	○
Strobe light (orange)	○	○	○	○	○	○	○	○
FNR switch on adjustable armrest* (*Standard on FC models)	●	●	●	●	●	●	●	●

● Standard ○ Option

For more information about standard and available optional equipment, please contact your dealer.

STANDARD EQUIPMENT AND OPTIONS (CONTINUED)

	DIESEL				LP GAS			
OHG AND CABIN	**DP40-45N3**	**DP50CN3**	**DP50N3**	**DP55N3**	**GP40-45N3**	**GP50CN3**	**GP50N3**	**GP55N3**
Grammer MSG 65 Vinyl seat	●	●	●	●	●	●	●	●
Grammer MSG 65 Cloth seat	○	○	○	○	○	○	○	○
Armrest LH side (for FC models)	●	●	●	●	●	●	●	●
Armrest LH side (for MC models)	●	●	●	●	●	●	●	●
Armrest RH side (for FC models)	–	–	–	–	–	–	–	–
Armrest RH side (for MC models)	●	●	●	●	●	●	●	●
Rear view mirrors (not available with Deluxe Cabin)	○	○	○	○	○	○	○	○
Convenience tray (*Only for MC models)	●	●	●	●	●	●	●	●
Deluxe Cabin	○	○	○	○	○	○	○	○
TYRES								
Solid pneumatic tyres	○	○	○	●	○	○	○	●
Pneumatic tyres	●	●	●	–	●	●	●	–
Solid pneumatic dual drive tyres	○	○	○	○	○	○	○	○
Pneumatic dual drive tyres	○	○	○	–	○	○	○	–
ENVIRONMENT								
Single element air cleaner	–	–	–	–	●	●	●	●
Double element air cleaner	●	●	●	●	○	○	○	○
Elevated exhaust	○	○	○	○	○	○	○	○

● Standard ○ Option

For more information about standard and available optional equipment, please contact your dealer.

	Characteristics							
1.01	Manufacturer (abbreviation)			Cat Lift Trucks	Cat Lift Trucks	Cat Lift Trucks	Cat Lift Trucks	Cat Lift Trucks
1.02	Manufacturer's model designation			**DP40N3**	**DP45N3**	**DP50CN3**	**DP50N3**	**DP55N3**
1.03	Power source: (battery, diesel, LPG, petrol)			Diesel	Diesel	Diesel	Diesel	Diesel
1.04	Operator type: pedestrian, (operator) - standing, - seated			Seated	Seated	Seated	Seated	Seated
1.05	Load capacity	Q	(kg)	4000	4500	5000	5000	5500
1.06	Load centre distance	c	(mm)	500	500	500	600	600
1.08	Load distance, axle to fork face	x	(mm)	577	577	582	602	602
1.09	Wheelbase	y	(mm)	1850	2000	2000	2150	2150
	Weight							
2.01	Truck weight, without load / including battery (simplex mast, lowest lift height)		kg	5920	6330	6850	7300	7640
2.02	Axle loading with ma x imum load, front / rear (simplex mast, lowest lift height)		kg	8960/960	9710/1130	10600/1250	11020/1280	11740/1400
2.03	Axle loading without load, front / rear (simplex mast, lowest lift height)		kg	2630/3290	2780/3550	2900/3950	3220/4080	3170/4470
	Wheels, Drive Train							
3.01	Tyres: V=solid, L=pneumatic, SE=solid pneumatic - front / rear			L/L	L/L	L/L	L/L	SE/SE
3.02	Tyre dimensions, front			8.25-15-14PR	300-15-18PR	300-15-18PR	300-15-18PR	300-15/8,00
3.03	Tyre dimensions, rear			7.00-12-14PR	7.00-12-14PR	7.00-12-14PR	7.00-12-14PR	7.00-12/5.00
3.05	Number of wheels, front / rear (x =driven)			2x/2	2x/2	2x/2	2x/2	2x/2
3.06	Track width (centre of tyres), front	b10	(mm)	1175	1175	1175	1175	1175
3.07	Track width (centre of tyres), rear	b11	(mm)	1180	1180	1180	1180	1180
	Dimensions							
4.01	Mast tilt, forwards / backwards	∂ / ß	°	6/12	6/12	6/12	6/12	6/12
4.02	Height with mast lowered (see tables)	h1	(mm)	2320	2320	2400	2400	2400
4.03	Free lift (see tables)	h2	(mm)	150	150	150	160	160
4.04	Lift height (see tables)	h3	(mm)	3300	3300	3300	3300	3300
4.05	Overall height with mast raised	h4	(mm)	4430	4430	4430	4580	4580
4.07	Height to top of overhead guard	h6	(mm)	2295	2295	2295	2295	2295
4.08	Seat height	h7	(mm)	1082	1082	1082	1082	1082
4.12	Tow coupling height	h10	(mm)	395	395	395	395	395
4.19	Overall length	l1	(mm)	4220	4350	4390	4530	4580
4.20	Length to fork face (includes fork thickness)	l2	(mm)	3000	3130	3170	3310	3360
4.21	Overall width	b1 / b2	(mm)	1415/1780	1460/1780	1460/1780	1460/1780	1460/1780
4.22	Fork dimensions (thickness, width, length)	s / e / l	(mm)	50/150/1220	50/150/1220	50/150/1220	60/150/1220	60/150/1220
4.23	Fork carriage to DIN 15 173 A / B / no			3A	3A	3A	4A	4A
4.24	Fork carriage width	b3	(mm)	1190	1190	1190	1190	1190
4.31	Ground clearance under mast, with load	m1	(mm)	150	150	150	150	150
4.32	Ground clearance at centre of wheelbase, with load (forks lowered)	m2	(mm)	227	227	227	227	227
4.33	Working aisle width with 1000 x 1200 mm pallets, crosswise	Ast	(mm)	4357	4507	4542	4692	4742
4.34a	Working aisle width with 800 × 1200 mm pallets, crosswise	Ast	(mm)	4157	4307	4342	4492	4542
4.34b	Working aisle width with 800 x 1200 mm pallets, lengthwise	Ast	(mm)	4557	4707	4742	4892	4942
4.35	Turning circle radius	Wa	(mm)	2580	2730	2760	2890	2940
4.36	Minimum distance between centres of rotation	b13	(mm)	836	903	903	971	971
	Performance							
5.01	Travel speed, with / without load		km / h	21.5/22.5	21.5/22.5	21/22	21/22	20.5/22
5.02	Lifting speed, with / without load		m / s	0.62/0.67	0.62/0.67	0.54/0.58	0.53/0.57	0.53/0.57
5.03	Lowering speed, with / without load		m / s	0.50/0.50	0.50/0.50	0.50/0.50	0.50/0.50	0.50/0.50
5.05	Rated drawbar pull, with / without load		N	25800/18200	25500/19300	24900/20000	24800/21900	24500/22100
5.06	Maximum drawbar pull,with / without load (5 min short duty)		N	-/-	-/-	-/-	-/-	-/-
5.07	Gradeability, with / without load		%	27.3/26.7	24.6/26.5	21.8/25.4	21/26.4	19.3/25.3
5.08	Maximum gradeability with / without load		%	-/-	-/-	-/-	-/-	-/-
5.09	Acceleration time (10 metres) with / without load		s	-/-	-/-	-/-	-/-	-/-
5.10	Service brakes (mechanical / hydraulic / electric / pneumatic)			Hydraulic	Hydraulic	Hydraulic	Hydraulic	Hydraulic
	IC Engine							
7.01	Manufacturer / Type			D04EG-T	D04EG-T	D04EG-T	D04EG-T	D04EG-T
7.02	Rated output to ISO 1585 (Gross output)		kW	54.0	54.0	54.0	54.0	54.0
7.03	Rated speed to DIN 70 020		rpm	2250	2250	2250	2250	2250
7.04	Number of cylinders / cubic capacity		cm³	4/3330	4/3330	4/3330	4/3330	4/3330
7.06	Max torque		Nm	260	260	260	260	260
7.07	Max torque at engine speed		rpm	1800	1800	1800	1800	1800
	Miscellaneous							
8.01	Type of drive control			Powershift 2/1	Powershift 2/1	Powershift 2/1	Powershift 2/1	Powershift 2/1
8.02	Maximum operating pressure for attachments		bar	191	191	191	191	191
8.03	Oil flow for attachments		l / min	80	80	80	80	80
8.04	Noise level, value at operator's ear (EN 12053)		dB (A)	78.5	78.5	78.5	78.5	78.5
8.05	Towing coupling, type DIN 15170			Pin	Pin	Pin	Pin	Pin

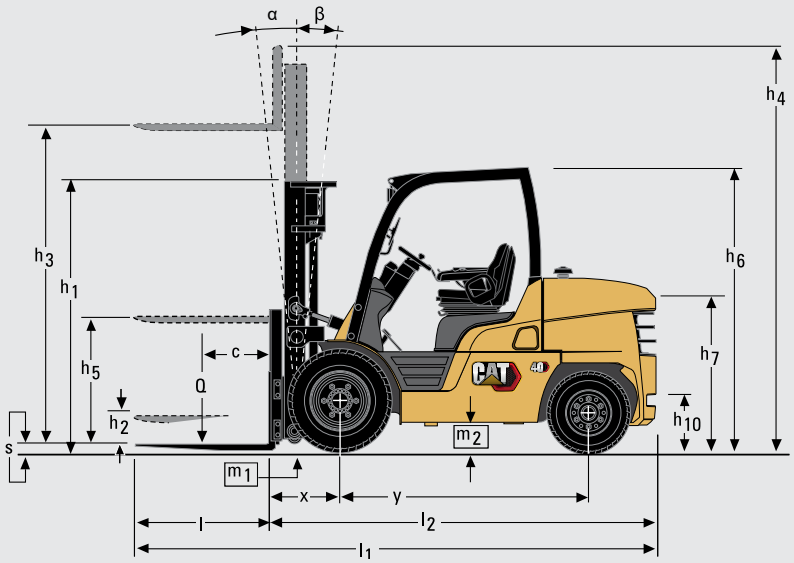

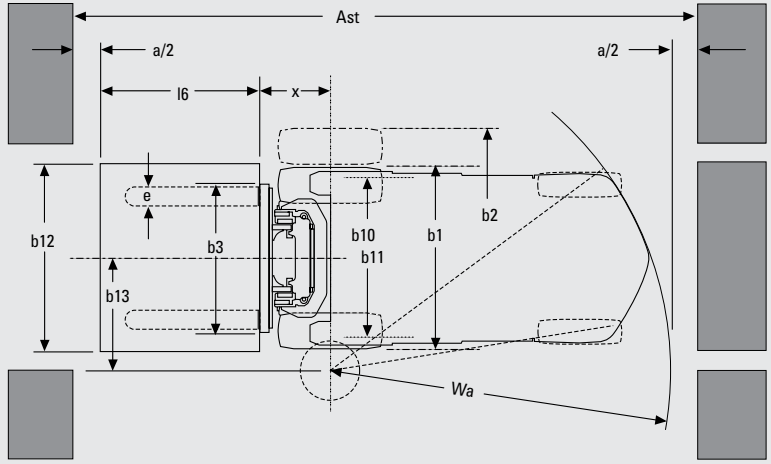

Ast = Wa + x + l6 + a
Ast = Working aisle width with load
a = Safety clearance (200 mm)
l6 = Pallet length (800 or 1000 mm)
b12 = Pallet width (1200 mm)

SPECIFICATIONS ENGINE POWERED LIFT TRUCKS 4.0 - 5.5 TONNES

	Characteristics							
1.01	Manufacturer (abbreviation)			Cat Lift Trucks	Cat Lift Trucks	Cat Lift Trucks	Cat Lift Trucks	Cat Lift Trucks
1.02	Manufacturer's model designation			**GP40N3**	**GP45N3**	**GP50CN3**	**GP50N3**	**GP55N3**
1.03	Power source: (battery, diesel, LPG, petrol)			LPG	LPG	LPG	LPG	LPG
1.04	Operator type: pedestrian, (operator) - standing, - seated			Seated	Seated	Seated	Seated	Seated
1.05	Load capacity	Q	(kg)	4000	4500	5000	5000	5500
1.06	Load centre distance	c	(mm)	500	500	500	600	600
1.08	Load distance, axle to fork face	x	(mm)	577	577	582	602	602
1.09	Wheelbase	y	(mm)	1850	2000	2000	2150	2150
	Weight							
2.01	Truck weight, without load / including battery (simplex mast, lowest lift height)		kg	5860	6270	6780	7240	7570
2.02	Axle loading with ma x imum load, front / rear (simplex mast, lowest lift height)		kg	8940/920	9680/1090	10570/1210	10990/1250	11710/1360
2.03	Axle loading without load, front / rear (simplex mast, lowest lift height)		kg	2610/3250	2750/3520	2870/3920	3190/4050	3130/4440
	Wheels, Drive Train							
3.01	Tyres: V=solid, L=pneumatic, SE=solid pneumatic - front / rear			L/L	L/L	L/L	L/L	SE/SE
3.02	Tyre dimensions, front			8.25-15-14PR	300-15-18PR	300-15-18PR	300-15-18PR	300-15/8.00
3.03	Tyre dimensions, rear			7.00-12-14PR	7.00-12-14PR	7.00-12-14PR	7.00-12-14PR	7.00-12/5.00
3.05	Number of wheels, front / rear (x =driven)			2x/2	2x/2	2x/2	2x/2	2x/2
3.06	Track width (centre of tyres), front	b10	(mm)	1175	1175	1175	1175	1175
3.07	Track width (centre of tyres), rear	b11	(mm)	1180	1180	1180	1180	1180
	Dimensions							
4.01	Mast tilt, forwards / backwards	∂ / ß	°	6/12	6/12	6/12	6/12	6/12
4.02	Height with mast lowered (see tables)	h1	(mm)	2320	2320	2400	2400	2400
4.03	Free lift (see tables)	h2	(mm)	150	150	150	160	160
4.04	Lift height (see tables)	h3	(mm)	3300	3300	3300	3300	3300
4.05	Overall height with mast raised	h4	(mm)	4430	4430	4580	4580	4580
4.07	Height to top of overhead guard	h6	(mm)	2295	2295	2295	2295	2295
4.08	Seat height	h7	(mm)	1082	1082	1082	1082	1082
4.12	Tow coupling height	h10	(mm)	395	395	395	395	395
4.19	Overall length	l1	(mm)	4220	4350	4390	4530	4580
4.20	Length to fork face (includes fork thickness)	l2	(mm)	3000	3130	3170	3310	3360
4.21	Overall width	b1 / b2	(mm)	1415/1780	1460/1780	1460/1780	1460/1780	1460/1780
4.22	Fork dimensions (thickness, width, length)	s / e / l	(mm)	50/150/1220	50/150/1220	50/150/1220	60/150/1220	60/150/1220
4.23	Fork carriage to DIN 15 173 A / B / no			3A	3A	3A	4A	4A
4.24	Fork carriage width	b3	(mm)	1190	1190	1190	1190	1190
4.31	Ground clearance under mast, with load	m1	(mm)	150	150	150	150	150
4.32	Ground clearance at centre of wheelbase, with load (forks lowered)	m2	(mm)	227	227	227	227	227
4.33	Working aisle width with 1000 x 1200 mm pallets, crosswise	Ast	(mm)	4357	4507	4542	4692	4742
4.34a	Working aisle width with 800 × 1200 mm pallets, crosswise	Ast	(mm)	4157	4307	4342	4492	4542
4.34b	Working aisle width with 800 x 1200 mm pallets, lengthwise	Ast	(mm)	4557	4707	4742	4892	4942
4.35	Turning circle radius	Wa	(mm)	2580	2730	2760	2890	2940
4.36	Minimum distance between centres of rotation	b13	(mm)	836	903	903	971	971
	Performance							
5.01	Travel speed, with / without load		km / h	23/23.5	22.5/23.5	22.5/23.5	22/23	22/23
5.02	Lifting speed, with / without load		m / s	0.67/0.69	0.67/0.69	0.58/0.59	0.57/0.59	0.53/0.59
5.03	Lowering speed, with / without load		m / s	0.50/0.50	0.50/0.50	0.50/0.50	0.50/0.50	0.50/0.50
5.05	Rated drawbar pull, with / without load		N	28700/17800	28400/19000	27800/19700	27700/21600	27500/21800
5.06	Maximum drawbar pull,with / without load (5 min short duty)		N	-/-	-/-	-/-	-/-	-/-
5.07	Gradeability, with / without load		%	30.8/26.3	27.7/26.3	24.6/25.2	23.7/26.2	21.8/25
5.08	Maximum gradeability with / without load		%	-/-	-/-	-/-	-/-	
5.09	Acceleration time (10 metres) with / without load		s	-/-	-/-	-/-	-/-	-/-
5.10	Service brakes (mechanical / hydraulic / electric / pneumatic)			Hydraulic	Hydraulic	Hydraulic	Hydraulic	Hydraulic
	IC Engine							
7.01	Manufacturer / Type			GK45	GK45	GK45	GK45	GK45
7.02	Rated output to ISO 1585 (Gross output)		kW	54.0	54.0	54.0	54.0	54.0
7.03	Rated speed to DIN 70 020		rpm	2450	2450	2450	2450	2450
7.04	Number of cylinders / cubic capacity		cm³	6/4450	6/4450	6/4450	6/4450	6/4450
7.06	Max torque		Nm	279	279	279	279	279
7.07	Max torque at engine speed		rpm	1600	1600	1600	1600	1600
	Miscellaneous							
8.01	Type of drive control			Powershift 2/1	Powershift 2/1	Powershift 2/1	Powershift 2/1	Powershift 2/1
8.02	Maximum operating pressure for attachments		bar	191	191	191	191	191
8.03	Oil flow for attachments		l / min	80	80	80	80	80
8.04	Noise level, value at operator's ear (EN 12053)		dB (A)	78.2	78.2	78.2	78.2	78.2
8.05	Towing coupling, type DIN 15170			Pin	Pin	Pin	Pin	Pin

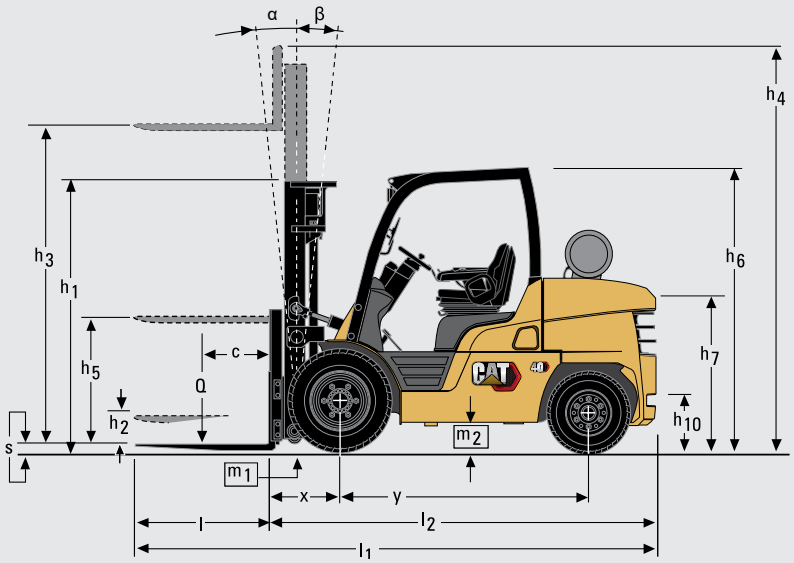

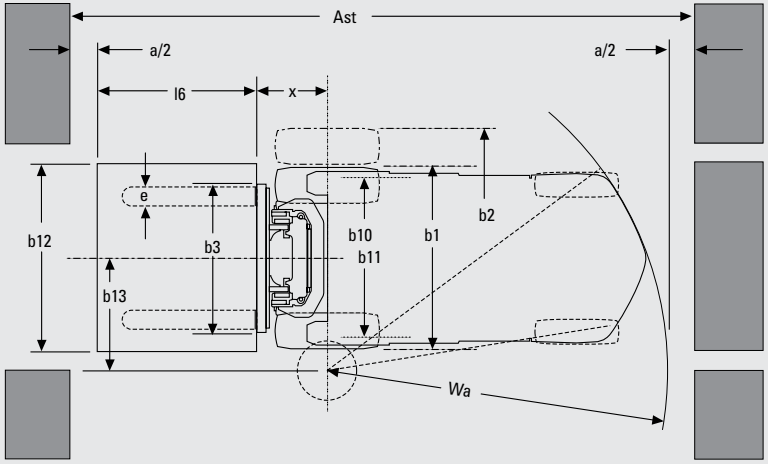

Ast = Wa + x + l6 + a
Ast = Working aisle width with load
a = Safety clearance (200 mm)
l6 = Pallet length (800 or 1000 mm)
b12 = Pallet width (1200 mm)

Mast Performance and Capacity

h1 Height with mast lowered
h2 Standard free lift
h3 Lift height
h4 Height with mast raised
h5 Full free lift
Q Lifting capacity, rated load
c Load centre (distance)

* Truck equipped with dual tyres. Consult your dealer for maximum back-tilt allowed, to obtain the capacities specified.

DP/GP40N3								DP/GP40N3 PNEUMATIC		DP/GP40N3 SOLID PNEUMATIC	
Mast Type	h3	h1	h4 (mm)		h2/h5 (mm)		Tilt angle (fwd - back)	Q @ c = 500mm	Q @ c = 600mm	Q @ c = 500mm	Q @ c = 600mm
	mm	mm	With Std. backrest	Without Std. backrest	With Std. backrest	Without Std. backrest		kg	kg	kg	kg
Simplex	3050	2170	4130	3930	150	150	6°/12°	4000	3500	4000	3500
	3350	2320	4430	4230	150	150	6°/12°	4000	3500	4000	3500
	3750	2520	4830	4630	150	150	6°/12°	4000	3500	4000	3500
	4050	2700	5130	4930	150	150	6°/12°	4000	3500	4000	3500
	4550	3000	5630	5430	150	150	6°/6°	4000	3500	4000	3500
	5050	3250	6130	5930	150	150	6°/6°	3850	3500	4000	3500
	5550	3500	6630	6430	150	150	6°/6°	3650*	3400*	3900	3500
	6050	3750	7130	6930	150	150	6°/6°	3500*	3300*	3850	3400
Duplex	3050	2170	4130	3950	1090	1270	6°/12°	4000	3500	4000	3500
	3350	2320	4430	4250	1240	1420	6°/12°	4000	3500	4000	3500
	3750	2520	4830	4650	1440	4620	6°/12°	4000	3500	4000	3500
	4110	2700	5190	5010	1620	1800	6°/12°	4000	3500	4000	3500
Triplex	3750	1950	4830	4650	870	1050	6°/6°	4000	3500	4000	3500
	4050	2050	5130	4950	970	1150	6°/6°	4000	3500	4000	3500
	4410	2170	5490	5310	1090	1270	6°/6°	4000	3500	4000	3500
	4750	2285	5830	5650	1200	1390	6°/6°	3900	3500	4000	3500
	5100	2400	6180	6000	1320	1500	6°/6°	3800	3500	3900	3500
	5550	2550	6630	6450	1470	1650	6°/6°	3600*	3400*	3700	3450
	6050	2750	7130	6950	1670	1850	6°/6°	3450*	3250*	3550	3300
	6550	2950	7630	7450	1870	2050	6°/6°	3000*	3000*	3350	3200
	7050	3150	8130	7950	2070	2250	6°/6°	2400*	2400*	3300*	3100*

DP/GP45N3								DP/GP45N3 PNEUMATIC		DP/GP45N3 SOLID PNEUMATIC	
Mast Type	h3	h1	h4 (mm)		h2/h5 (mm)		Tilt angle (fwd - back)	Q @ c = 500mm	Q @ c = 600mm	Q @ c = 500mm	Q @ c = 600mm
	mm	mm	With Std. backrest	Without Std. backrest	With Std. backrest	Without Std. backrest		kg	kg	kg	kg
Simplex	3050	2250	4130	3890	150	150	6°/12°	4500	4000	4500	4000
	3350	2400	4430	4190	150	150	6°/12°	4500	4000	4500	4000
	3750	2600	4830	4590	150	150	6°/12°	4500	4000	4500	4000
	4050	2850	5130	4890	150	150	6°/12°	4500	4000	4500	4000
	4550	3100	5630	5390	150	150	6°/6°	4500	4000	4500	4000
	5050	3350	6130	5890	150	150	6°/6°	4500	4000	4500	4000
	5550	3600	6630	6390	150	150	6°/6°	4300*	4000*	4400	4000
	6050	3850	7130	6890	150	150	6°/6°	3900*	3900*	4400	3900
Duplex	3020	2250	4100	3870	1170	1400	6°/12°	4500	4000	4500	4000
	3330	2400	4410	4180	1320	1550	6°/12°	4500	4000	4500	4000
	3530	2500	4610	4380	1420	1650	6°/12°	4500	4000	4500	4000
	4130	2850	5210	4980	1770	2000	6°/12°	4500	4000	4500	4000
Triplex	3750	2050	4830	4610	970	1200	6°/6°	4500	4000	4500	4000
	4090	2170	5170	4950	1090	1320	6°/6°	4500	4000	4500	4000
	4360	2260	5440	5220	1180	1410	6°/6°	4500	4000	4500	4000
	4800	2400	5880	5660	1320	1550	6°/6°	4500	4000	4500	4000
	5100	2500	6180	5960	1420	1650	6°/6°	4500	4000	4500	4000
	5550	2650	6630	6410	1570	1800	6°/6°	4200*	4000*	4350	4000
	6050	2850	7130	6910	1770	2000	6°/6°	4050*	3800*	4200	3900
	6550	3050	7630	7410	1970	2200	6°/6°	3000*	3000*	4050*	3800*
	7050	3250	8130	7910	2170	2400	6°/6°	2400*	2400*	3050*	3500*

DP/GP50CN3								DP/GP50CN3 PNEUMATIC		DP/GP50CN3 SOLID PNEUMATIC	
Mast Type	h3	h1	h4 (mm)		h2/h5 (mm)		Tilt angle (fwd - back)	Q @ c = 500mm	Q @ c = 600mm	Q @ c = 500mm	Q @ c = 600mm
	mm	mm	With Std. backrest	Without Std. backrest	With Std. backrest	Without Std. backrest		kg	kg	kg	kg
Simplex	3060	2250	4280	4030	160	160	6°/12°	5000	4500	5000	4500
	3360	2400	4580	4330	160	160	6°/12°	5000	4500	5000	4500
	3760	2600	4980	4730	160	160	6°/12°	5000	4500	5000	4500
	4060	2850	5280	5030	160	160	6°/12°	5000	4500	5000	4500
	4560	3100	5780	5530	160	160	6°/6°	5000	4500	5000	4500
	5060	3350	6280	6030	160	160	6°/6°	5000	4500	5000	4500
	5560	3600	6780	6530	160	160	6°/6°	4750*	4500*	4850	4500
	6060	3850	7280	7030	160	160	6°/6°	3900*	3900*	4700	4400
Duplex	3030	2250	4250	4000	1030	1280	6°/12°	5000	4500	5000	4500
	3340	2400	4560	4310	1180	1430	6°/12°	5000	4500	5000	4500
	4140	2850	5360	5110	1630	1880	6°/12°	5000	4500	5000	4500
Triplex	3760	2050	4980	4740	830	1080	6°/6°	5000	4500	5000	4500
	4100	2170	5320	5080	950	1200	6°/6°	5000	4500	5000	4500
	4370	2260	5590	5350	1040	1290	6°/6°	5000	4500	5000	4500
	4810	2400	6030	5790	1180	1430	6°/6°	5000	4500	5000	4500
	5110	2500	6330	6090	1280	1530	6°/6°	5000	4500	5000	4500
	5560	2650	6780	6540	1430	1680	6°/6°	4700*	4450*	4800	4500
	6060	2850	7280	7040	1630	1880	6°/6°	4200*	4200*	4650*	4350*
	6560	3050	7780	7540	1830	2080	6°/6°	3000*	3000*	4450*	4200*
	7060	3250	8280	8040	2030	2280	6°/6°	2400*	2400*	3500*	3500*

DP/GP50N3								DP/GP50N3 PNEUMATIC	DP/GP50N3 SOLID PNEUMATIC
Mast Type	h3	h1	h4 (mm)		h2/h5 (mm)		Tilt angle (fwd - back)	Q @ c = 600mm kg	Q @ c = 600mm kg
	mm	mm	With Std. backrest	Without Std. backrest	With Std. backrest	Without Std. backrest			
Simplex	3060	2250	4280	4030	160	160	6°/12°	5000	5000
	3360	2400	4580	4330	160	160	6°/12°	5000	5000
	3760	2600	4980	4730	160	160	6°/12°	5000	5000
	4060	2850	5280	5030	160	160	6°/12°	5000	5000
	4560	3100	5780	5530	160	160	6°/6°	5000	5000
	5060	3350	6280	6030	160	160	6°/6°	5000	5000
	5560	3600	6780	6530	160	160	6°/6°	4900*	5000
	6060	3850	7280	7030	160	160	6°/6°	4100*	4900
Duplex	3030	2250	4250	4000	1025	1280	6°/12°	5000	5000
	3340	2400	4560	4310	1175	1430	6°/12°	5000	5000
	4140	2850	5360	5110	1625	1880	6°/12°	5000	5000
Triplex	3760	2050	4980	4740	830	1080	6°/6°	5000	5000
	4100	2170	5320	5080	950	1200	6°/6°	5000	5000
	4370	2260	5590	5350	1040	1290	6°/6°	5000	5000
	4810	2400	6030	5790	1180	1430	6°/6°	5000	5000
	5110	2500	6330	6090	1280	1530	6°/6°	5000	5000
	5560	2650	6780	6540	1430	1680	6°/6°	4900*	5000
	6060	2850	7280	7040	1630	1880	6°/6°	4300*	4800
	6560	3050	7780	7540	1830	2080	6°/6°	-	-
	7060	3250	8280	8040	2030	2280	6°/6°	-	-

DP/GP55N3								DP/GP55N3 PNEUMATIC	DP/GP55N3 SOLID PNEUMATIC
Mast Type	h3	h1	h4 (mm)		h2/h5 (mm)		Tilt angle (fwd - back)	Q @ c = 600mm kg	Q @ c = 600mm kg
	mm	mm	With Std. backrest	Without Std. backrest	With Std. backrest	Without Std. backrest			
Simplex	3060	2250	4280	4030	160	160	6°/12°	5500	5500
	3360	2400	4580	4330	160	160	6°/12°	5500	5500
	3760	2600	4980	4730	160	160	6°/12°	5500	5500
	4060	2850	5280	5030	160	160	6°/12°	5500	5500
	4560	3100	5780	5530	160	160	6°/6°	5500	5500
	5060	3350	6280	6030	160	160	6°/6°	5500*	5500*
	5560	3600	6780	6530	160	160	6°/6°	-	5500
	6060	3850	7280	7030	160	160	6°/6°	-	5350*
Duplex	3030	2250	4250	4000	1025	1280	6°/12°	5500	5500
	3340	2400	4560	4310	1175	1430	6°/12°	5500	5500
	4140	2850	5360	5110	1625	1880	6°/12°	5500	5500
Triplex	3760	2050	4980	4740	830	1080	6°/6°	5500	5500
	4100	2170	5320	5080	950	1200	6°/6°	5500	5500
	4370	2260	5590	5350	1040	1290	6°/6°	5500	5500
	4810	2400	6030	5790	1180	1430	6°/6°	5500	5500
	5110	2500	6330	6090	1280	1530	6°/6°	5500*	5500
	5560	2650	6780	6540	1430	1680	6°/6°	-	5500
	6060	2850	7280	7040	1630	1880	6°/6°	-	5300*

Mast Performance and Capacity

h1 Height with mast lowered
h2 Standard free lift
h3 Lift height
h4 Height with mast raised
h5 Full free lift
Q Lifting capacity, rated load
c Load centre (distance)

* Truck equipped with dual tyres. Consult your dealer for maximum back-tilt allowed, to obtain the capacities specified.

Capacity vs. Load Distance

Simplex - h3 = 4000mm

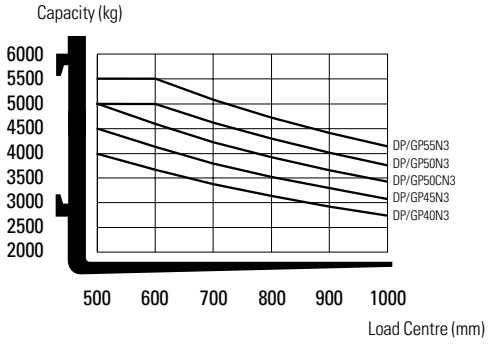

info@catlifttruck.com | www.catlifttruck.com

CESC2015-D(09/20) ©2020, MLE B.V. All Rights Reserved. CAT, CATERPILLAR, LET'S DO THE WORK, their respective logos, "Caterpillar Yellow", the "Power Edge" and Cat "Modern Hex" trade dress as well as corporate and product identity used herein, are trademarks of Caterpillar and may not be used without permission.

NOTE: Performance specifications may vary depending on standard manufacturing tolerances, vehicle condition, types of tyres, floor or surface conditions, applications, or operating environment. Trucks may be shown with non-standard options. Specific performance requirements and locally available configurations should be discussed with your Cat lift trucks Dealer. Cat Lift Trucks follows a policy of continual product improvement. For this reason, some materials, options and specifications could change without notice.

DOWNLOAD BROCHURE

WATCH VIDEOS

DOWNLOAD OUR APP