GTH™-4018 SR

Genie
A TEREX BRAND

Specifications

MODELS	GTH™-4018 SR	
MEASUREMENTS	**Metric**	**Imperial**
Lifting height maximum with outriggers	17.54 m	57 ft 7 in
Lifting height maximum without outriggers	17.30 m	56 ft 9 in
Lifting capacity maximum	4,000 kg	8,818 lbs
Lift capacity at maximum height	2,000 kg	4,409 lbs
Lift capacity at maximum reach	500 kg	1,102 lbs
Forward reach maximum	15.53 m	50 ft 11 in
Reach at maximum height	3.80 m	12 ft 5 in
A Height	2.99 m	9 ft 10 in
B Height at steering wheel	2.22 m	7 ft 3 in
C Width	2.46 m	8 ft 1 in
D Cab width	93 cm	3 ft
E Track	1.95 m	6 ft 5 in
F Wheelbase	3.00 m	9 ft 10 in
G Length at front wheels	4.66 m	15 ft 3 in
H Length at fork-holder plate	6.60 m	21 ft 8 in
I Ground clearance	34 cm	1 ft 1 in
L Overall width, outriggers extended	4.36 m	14 ft 4 in
M Side rear overhang	2.60 m	8 ft 6 in
N Side front overhang	3.97 m	13 ft
O Overall length	7.80 m	25 ft 7 in
R1 Obstruction angle	26°	
R2 Departure angle	26°	
PRODUCTIVITY		
Inside/outside turning radius	1.97 m/4.12 m	6 ft 6 in/13 ft 6 in
Break-out force (with 800 L shovel SAE J 732/80)	5,900 kg	13,007 lbs
Towing capacity at dynamometer*	7,000 kg	15,432 lbs
Drive speed max.	35 km/h	22 mph
Fork-holder plate rotation	138°	
Tyres (DIN 70361)	18-19.5” PR16 10 holes wheel disc	
Lifting/lowering speed*	14 sec./9 sec.	
Extension/retraction speed*	27 sec./17 sec.	
POWER AND TRANSMISSION		
Engine	Perkins 1104 D-44T 4-cylinder turbo diesel 99 hp (74 kW), stage III	
Transmission	Hydrostatic variable displacement pump linked to variable displacement motor. 2-speed mechanical gearbox.	
Service pumps	Boom & control system gear pump type: 280 Bar, 88L/min.	
Petrol tank capacities	205 L	45 gal
Engine oil capacities	11.5 L	2.5 gal
Hydraulic oil tank capacities	220 L	48 gal
WEIGHT		
Weight**	14,000 kg	30,864 lbs

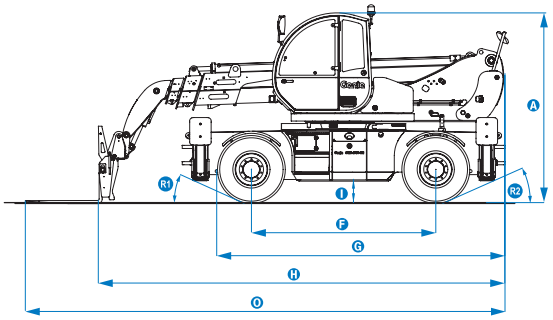

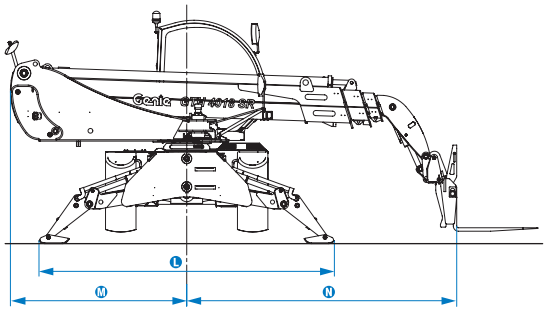

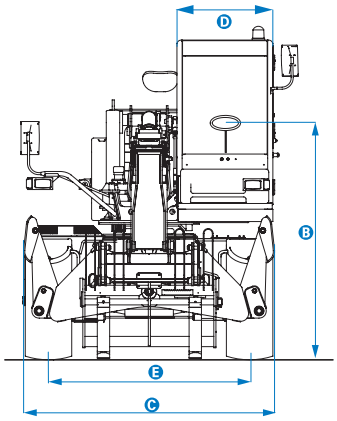

STANDARDS COMPLIANCE

EU Machinery Directive 2006/42/EC
Operating cab conforms to ISO3471 (ROPS) and ISO3449 (FOPS)
Low emission engine conforms to EU Directive 97/68/EC Stage III and 2004/26/EC
Noise emission conforms to EU Directive 2000/14/EC (LpA=74 dB, LwA=103dB)
Vibration levels according to EN13059:2002 (hand-arm <2.5m/s², whole body 0.35m/s²)

* Without load

** Weight will vary depending on options and/or country standards

03/12. Part No. B108034UK

Courtesy of Crane.Market

GTH™-4018 SR

Genie
A TEREX BRAND

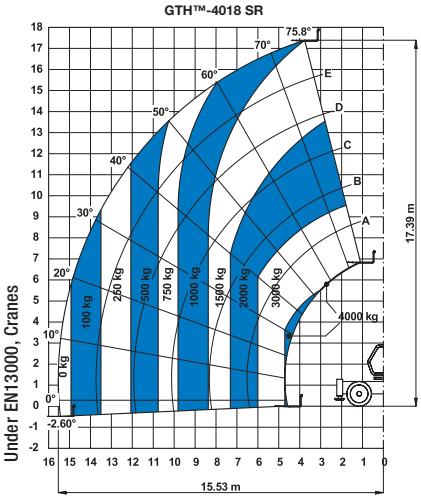

On wheels with forks

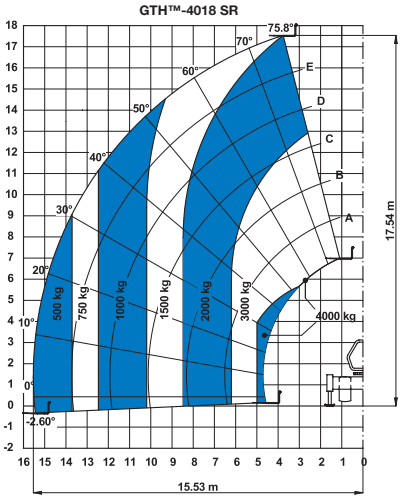

On outriggers with forks

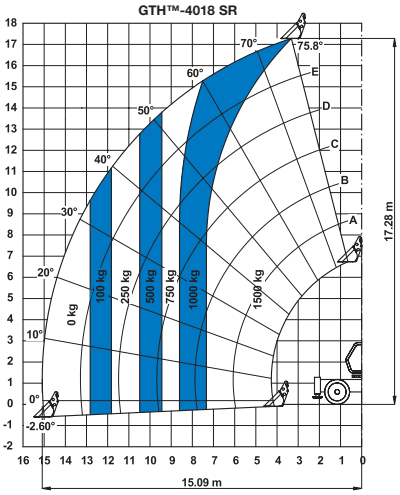

On wheels with 800 L shovel

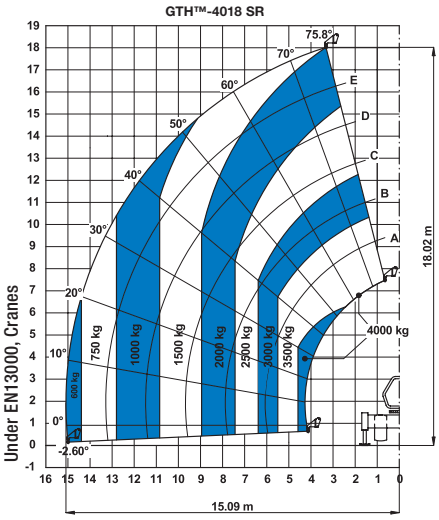

On outriggers with 5t fixed hook on plate

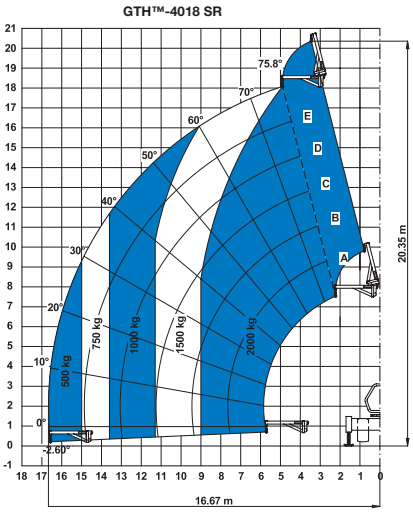

On outriggers with 2m jib (mechanical)

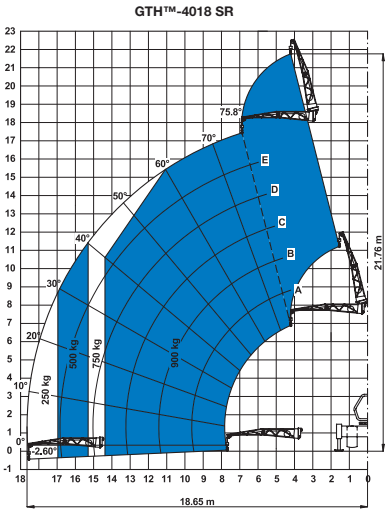

On outriggers with 4m jib (mechanical/hydraulic)

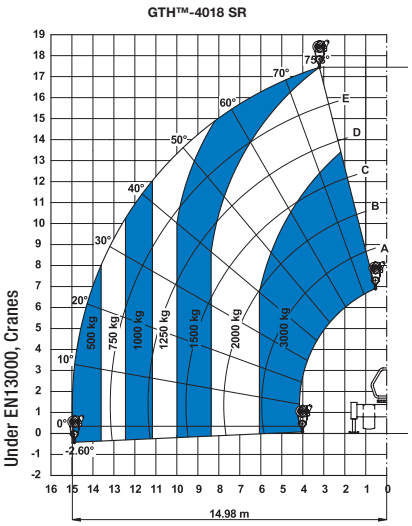

On outriggers with 3t hydraulic hoist

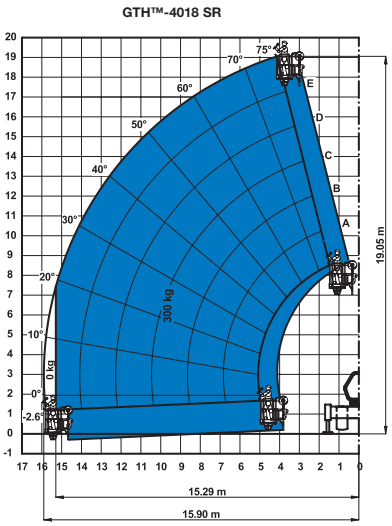

On outriggers with fixed work platform

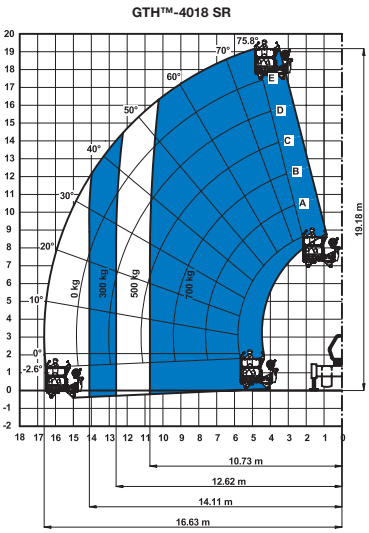

On outriggers with rotating extendable work platform

Courtesy of Crane.Market

Specifications

Dimension references

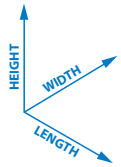

FORK ATTACHMENTS

Part number	Description	Payload	Width	Length	Height	Weight
55.0750.0052	Floating forks	4,000 kg	1380 mm	1615 mm	1260 mm	395 kg
55.0750.0055	FEM 3 plate and forks kit	4,000 kg	1,390 mm	1,620 mm	1,175 mm	410 kg
59.0601.5004	Hydraulic forks side-shift FEM 3 +/- 100 mm	4,000 kg	1,370 mm	1,740 mm	1,195 mm	545 kg

BUCKET AND SHOVEL ATTACHMENTS

Part number	Description	Width	Length	Height	Weight	Hyd. flow max.
59.0201.9001	800 L loading shovel	2,435 mm	1,140 mm	1,170 mm	510 kg	
59.0400.0000	500 L concrete bucket manual discharge	1,110 mm	1,110 mm	1,320 mm	230 kg	
59.0400.1000	500 L concrete bucket hydraulic discharge	1,110 mm	1,110 mm	1,320 mm	244 kg	65/250 (L/min)/bars
59.0400.2000	800 L concrete bucket manual discharge	1,110 mm	1,110 mm	1,520 mm	250 kg	60/220 (L/min)/bars
59.0400.3000	800 L concrete bucket hydraulic discharge	1,110 mm	1,110 mm	1,520 mm	264 kg	60/220 L/min/bars
59.0401.2002	450 L concrete mixing bucket fully hydraulic	1,650 mm	880 mm	990 mm	550 kg	60/220 L/min/bars
59.0400.7000	Brick holder basket	800 mm	1,110 mm	1,150 mm	120 kg	

HANDLING AND LIFTING ATTACHMENTS

Part number	Description	Payload	Width	Length	Height*	Weight
59.0700.9002	5t fixed hook on plate	4,000 kg	1,335 mm	830 mm	1,070/1,110 mm	160 kg
59.0802.3007	2m/2000 kg mechanical jib	2,000 kg	1,335 mm	2,290 mm	800/1,080 mm	255 kg
59.0802.3008	4m/900 kg mechanical jib	900 kg	1,190 mm	4,450 mm	980/1,220 mm	245 kg
59.0802.3009	4m/900 kg hydraulic jib	900 kg	1190 mm	4,485 mm	980/1,220 mm	320 kg
59.0901.9002	3t hydraulic hoist	3,000 kg	1335 mm	830 mm	1,260/1,260 mm	350 kg

WORK PLATFORM ATTACHMENTS

Part number	Description	Payload	Width**	Length	Height	Weight
59.1111.6002	Rotating and extendable +/-90° 3 persons max.	700 kg	2,520 mm up to 4,610 mm	2,110 mm	1,850 mm	920 kg
59.1111.6005	Fixed non extendable 2 persons max.	300 kg	2300 mm	1,490 mm	1,710 mm	400 kg

* Legs folded up/down
** Stowed/extended

Courtesy of Genielift Market

Genie
A TEREX BRAND

STANDARD ROTATING ROUGH TERRAIN TELEHANDLERS

GTH™-4018 SR

Features

STANDARD FEATURES

MEASUREMENTS

- 4,000 kg (8,818 lb) maximum lift capacity
- 17.54 m (57 ft 7 in) maximum lift height
- 15.53 m (50 ft 11 in) maximum forward reach

PRODUCTIVITY

- 4 x 4
- 4 - wheel steer
- 3 steering modes:
  - front wheel steer
  - crab steer
  - coordinated steer
- Hydraulic line on boom
- Electrical line on boom
- Power assisted steering
- Front and rear outriggers
- 400° rotation (200° left, 200° right)
- Hydrostatic transmission with variable displacement pump and motor linked with 2-speed mechanical gearbox
- Multifunction electro-proportional 5x1 joystick
- Limited slip differential on front axle
- Attachment holder plate - mechanical coupling
- Two-section door (glass upper/steel lower)
- Angle and length indicators on boom correspond to load charts
- Adjustable suspended seat with operator detection seat contact switch
- Battery disconnection switch
- Large diameter steering wheel
- Front & rear windscreen wipers
- Sunshield
- Roof protection grid
- Two side view mirrors & rear fish eye mirror
- Front & rear lights
- Side mounted engine for easy access to components
- Oil immersed, multi-disc brakes on both axles
- Lockable fuel tank
- Lockable storage box
- Maintenance collar
- Rear wheels alignment system
- Road/jobsite/work-platform switch
- Stability and load control system:
- Load moment indicator with LEDs
- Audible alarm
- Automatic lock-out of boom extension and lowering
- Automatic lock-out of stabilisers
- Automatic lock-out of rear axle

POWER

- Perkins turbo diesel 99 hp (74 kW), stage III

TYRES

- 18-19.5” PR16. 10 holes wheel disc (DIN 70361)

OPTIONS & ACCESSORIES

PRODUCTIVITY

- Air conditioning
- Additional electrical line with cable reel on boom
- Additional hydraulic line on boom
- GM-1 Articulation for Manitou attachments*
- GM-1 drainline**
- Combined GM-1 Articulation for Manitou attachments and GM-1 drainline
- Hydraulic quick coupling for attachments
- Adjustable spotlight on boom
- Adjustable spotlight on cab
- Windshield protection grid
- Wiper on cab roof
- 6 t towing hook
- Winter fuel -22˚C
- Low temperature hydraulic oil
- Outrigger pads & holder
- Biodegradable hydraulic oil
- 10 t hydraulic jack + 24 mm box wrench
- External load moment visual indicator
- Left hand joystick
- Radio remote control
- Concrete mixing bucket pre-arrangement
- Work platform attachment pre-arrangement

TYRES AND WHEELS

- Foam filled tyre 18-19.5” PR16
- Spare wheel 18-19.5” PR16
- Spare wheel foam filled tyres 18-19.5” PR16

ATTACHMENTS

- Floating forks L 1200 mm, section 120x50 mm
- GM-1 floating forks L 1200 mm, section 120x50 mm***
- Floating forks L 1200 mm, section 100x50 mm (UK only)
- FEM 3 plate and forks kit
- FEM 3 forks with hydraulic side-shift (+/-100 mm)
- 800 L loading shovel
- 500/800 L concrete bucket (manual or hydraulic discharge)
- 450 L concrete mixing bucket (fully hydraulic)
- Brick-holder basket
- Fixed hook on plate
- 2 m mechanical extension jib, 2,000 kg capacity
- 4 m mechanical or hydraulic extension jib, 900 kg capacity
- 3 t hydraulic hoist
- Fixed work platform
- Rotating and extendable work platform

* Contact your sales representative for further information.
** Required for Manitou hydraulic winch
*** Only available with factory installed GM-1 Articulation for Manitou attachments.

Enquiries from Europe:
Tel: +31 165 519 361
Fax: +31 165 511 148
Email: AWP-InfoEurope@terex.com

Offices:

France
Tel: +33 (0)2 37 26 09 99
Fax: +33 (0)2 37 26 09 98

Germany
Tel: +49 (0)4221 491 810
Fax: +49 (0)4221 491 820

Spain
Tel: +34 93 572 50 90
Fax: +34 93 572 50 91

Scandinavia
Tel: +46 31 57 51 00
Fax: +46 31 57 51 04

The Netherlands
Tel: +31 165 519 361
Fax: +31 165 511 148

UK
The Maltings
Wharf Road
Grantham NG31 6BH
UK
Tel: +44 (0)1476 584333
Fax: +44 (0)1476 584334

Middle East
Tel: +971 4 399 0381
Fax: +971 4 399 0382
Email: AWP.Infome@terex.com

Russia & CIS countries
Tel: +7 495 660 32 30
Fax: +7 495 660 32 29
Email: info@terexrus.ru

Corporate Headquarters:

United States
18340 NE 76th Street
P.O. Box 97030
Redmond, WA
USA 98073-9730
Tel: +1 425 881-1800
Fax: +1 425 883-3475

Distributed By:

Effective date: March, 2012. Product specifications and prices are subject to change without notice or obligation. The photographs and/or drawings in this document are for illustrative purposes only. Refer to the appropriate Operator’s Manual for instructions on the proper use of this equipment. Failure to follow the appropriate Operator’s Manual when using our equipment or to otherwise act irresponsibly may result in serious injury or death. The only warranty applicable to our equipment is the standard written warranty applicable to the particular product and sale and we make no other warranty, expressed or implied. Products and services listed may be trademarks, service marks or trade-names of Terex Corporation and/or their subsidiaries in the U.S.A. and many other countries. Genie is a Registered Trademark of Terex South Dakota, Inc. © 2012 Terex Corporation.

03/12. Part No. B108034UK

Courtesy of Genie Market