GRADALL®

524D

2-section or 3-section boom
MATERIAL HANDLER

524D

SPECIFICATIONS

Performance

Rated Capacity
At 24 in. (610 mm) load center, 6,000 lb. (2,722 kg)

Maximum Lift Height
24.5 ft. (7.5 m) or 32 ft. (9.8 m)

Frame Leveling
8 degrees

Lift Speed (boom retracted)
Empty, 121 f.p.m. (36.9 m/min);
Loaded 79.3 f.p.m. (24.2 m/min)

Boom Speed
Extend 107.5 f.p.m. (32.8 m/min)
Retract 131.3 f.p.m. (40 m/min)

Travel Speeds Forward and Reverse
4WD-2WD 7.5-16 mph (12-25.7 km/hr)

Operating Weight
With 48" (1.2 m) carriage and forks,
524D-2S - 15,320 lb. (6,955 kg)
524D-3S - 15,926 lb. (7,230 kg)

Drawbar Pull
Loaded 12,850 lbs. (5828 kg)

Drive Line Specifications

Engine
Make and Model ... Cummins B3.9C-80
Fuel ..... No. 2 Diesel
Cycles 4
No. of Cylinders 4
Displacement ..... 239 cu. in. (3.9 L)
Rated Speed ..... 2500 rpm
Max. Gross BHP ..... 80 hp (60 Kw)
Fuel Tank ..... 40 gal. (151.4 L)

Engine Filters
Two-stage dry air cleaner - centrifugal pre-cleaner with continuous dust ejector PLUS cleanable and replaceable dry filter element. Visual service indicator.

Replaceable element-type fuel filter/water separator. Full-flow replaceable-element engine oil filter.

Electrical System
Voltage - 12V
Alternator - 63 amp
Battery - 810 Cold Cranking AMP at 0°F

Hydrostatic Drive
5500 PSI (37,923 kpa) closed loop with piston pump and motors.

All hydraulic connections ORS and Code 62 O-ring flanges.

Integral reservoir with implement hydraulics.

8 micron suction filter for charge pump.

Self-contained, swashplate design, variable displacement, over center, piston pump. Neutral start switch. (Park brake must also be engaged to start.)

2WD and 4WD inching (524 only).
2WD - 4WD switch on dash (524 only).
Forward, neutral, reverse lever on left of steering column.

Single foot pedal control provides both braking and inching for lifting while maneuvering vehicle.

Electro/hydraulic traction lock valve for superior tractive effort (524 only).

Axles
Planetary hubs with piston motors on rear axle (524 only).

Piston motor-driven planetary front axle with high-bias, limited slip differential.

Brakes
Service - Hydraulic wet disc brake on each front wheel.

Hydraulic dynamic braking on front axle and both rear wheels.

Parking Brakes
Spring-applied electro/hydraulic release, fail safe on both front wheels.

Light on dash indicates when brake is on.

Tires
13:00x24 - G2 type (common wheel).
Optional: 13.00R24 radial tires.

Cab
Certified FOPS/ROPS structure with horn, back-up alarm and right side rear view mirror.

Steering
Hydraulic power steering with manual backup. Rear wheel steering, 90° pivot around either front tire.

Instruments
Volt meter, hour meter, engine oil pressure gauge, fuel gauge, water temperature gauge. All gauges protected by clear acrylic covers.

Controls
Grouped for operator comfort and convenience.

Boom lift and crowd on single joystick.

Right-hand tilt and sway levers.

Foot throttle.

Floor mounted traction lock switch (524 only).

Hydraulic System-Implement
Single-section gear-direct from engine.

40 gal. (151.4 L) system capacity.

8 micron filter with visual service indicator and suction strainer.

Lift, crowd, tilt and sway cylinders have safety checks to prevent dropping of load in the event of hose or other hydraulic failure.

Accessories & Options

Cab Enclosure
Lockable, split door. Windshield wiper. Heater & defroster fan.

Light Group
Consists of 2 cab-mounted headlights, 1 backup/tail/stoplight and rotating beacon.

Auxiliary Hydraulic Circuit
Required for all attachments equipped with cylinders or other hydraulic components. Consists of valves, controls, hydraulic lines.

Radial Tires

Winch

Left Hand Tilt/Sway Control

Tilt on Joystick

Attachments

Carriage
48" (1.2 m) & 66" (1.7 m)

Slope Pile Carriage
48" (1.2 m) & 66" (1.7 m)

100° Swing Carriage
72" (1.8 m)

Pallet Forks
2" x 4" x 48" (50.8 mm x 101.6 mm x 1.2 m)

Cubing Forks
2" x 2" x 48" (50.8 mm x 50.8 mm x 1.2 m)

Vertical Mast
6' (1.8 m) with 48" (1.2 m) or 66" (1.7 m) Carriage

Truss Boom With or Without Winch
10' (3.0 m)

Bucket
.0.75 CY (0.57m³) or 1.25 CY (0.95 m³)

Work Platform

Instant Hook

524D
MATERIAL HANDLER

524D-2S (2-Section Boom)

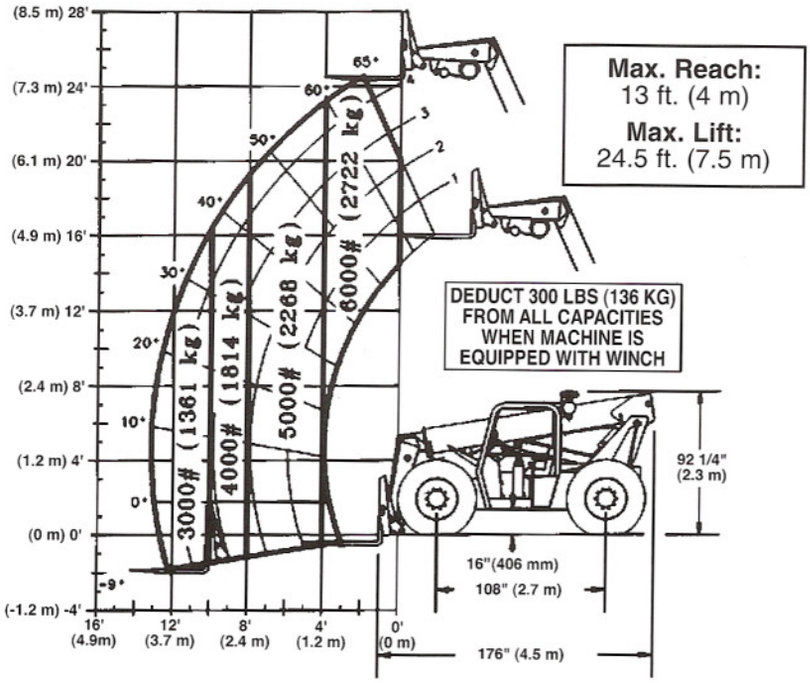

524D-3S (3-Section Boom)

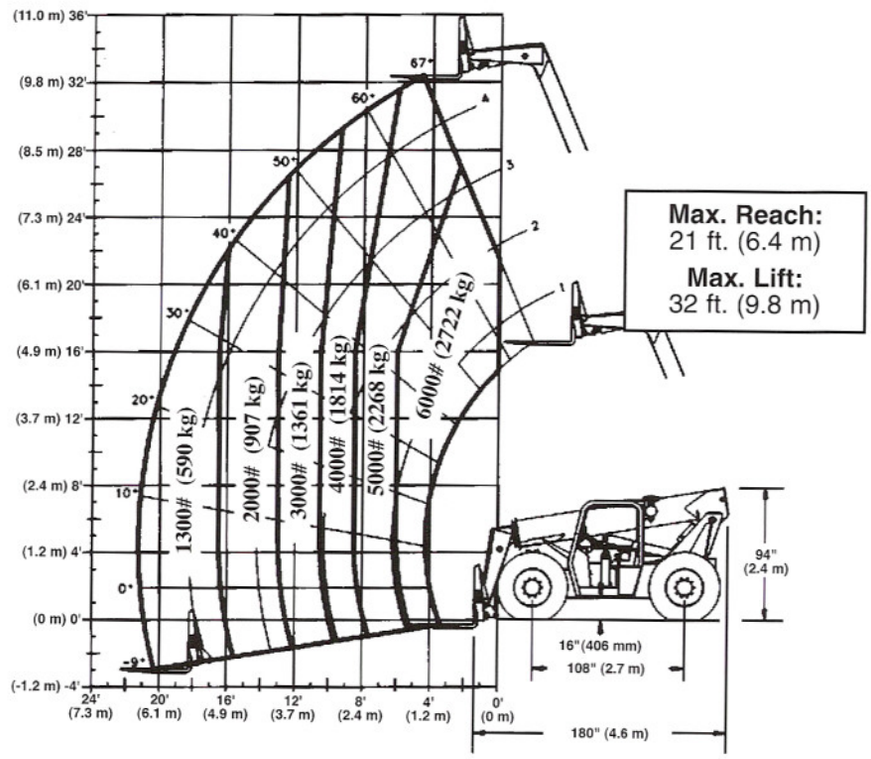

IMPORTANT

Rated lift capacities shown are with machine equipped with carriage and pallet forks and on a firm, level surface with undamaged, properly inflated tires. Machine specifications and stability are based on rated lift capacities at specific boom angles and boom lengths. If specifications are critical, the proposed application should be discussed with your dealer.

DO NOT exceed rated lift capacity loads, as unstable and dangerous machine conditions will result.

DO NOT tip the machine forward to determine the allowable load.

Use only Gradall approved attachments with the proper material handler model/attachment load capacity chart displayed in the operator's cab. OSHA requires all rough terrain forklift operators to be trained according to OSHA 29 CFR 1910.178 (l).

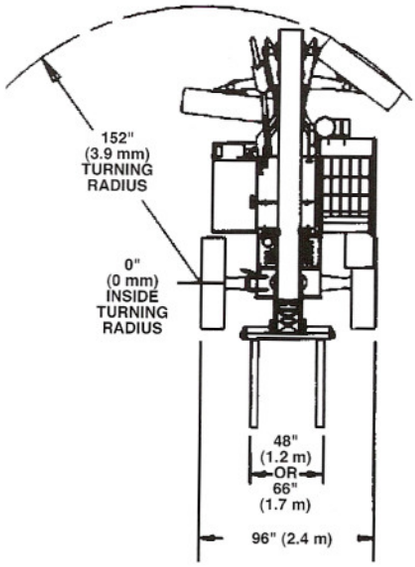

This machine is designed to meet specifications of ASME B56.6b-1998. It is Gradall Policy to continually improve its products. Therefore, designs, materials and specifications are subject to change without notice and without incurring any liability on units already sold. Units shown may have optional equipment. See applicable specifications and price lists for optional equipment.

GRADALL®
A JLG® COMPANY

The Gradall Company
600 East Chestnut Street, Orrville, Ohio 44667
Phone (330) 339-2211 FAX (330) 684-1029
www.gradall.com

Form No. 10131 12/01
Replaces Form No. 10006
Printed in USA