NEW

AGRI LOADALL | 550-80/560-80 AGRI PLUS

Gross power: 93–108kW (125–145hp) Lift capacity: 4,999kg – 6,000kg Lift height: 7.9m – 8.1m

NEW AND IMPROVED.

SINCE JCB FIRST PIONEERED THE IDEA OF THE TELESCOPIC HANDLER BACK IN 1977, WE'VE BUILT INNOVATIVE MACHINES TO HANDLE THE TOUGHEST AGRICULTURAL TASKS WITH REASSURING EASE. OUR LATEST 550-80 AND 560-80 AGRI LOADALLS FOLLOW IN THIS TRADITION, OFFERING A RANGE OF FRESH FEATURES AND PERFORMANCE IMPROVEMENTS FOR TOTAL ALL-ROUND PRODUCTIVITY.

The latest JCB AGRI Loadalls.

We used extensive customer input to develop our latest range of AGRI Loadalls, so the new 550-80 and 560-80 are blessed with power, productivity, manoeuvrability, efficiency, durability, comfort, safety and low cost of ownership.

We've introduced many innovative and practical new features to tackle the uniquely challenging farming environment. Like our award-winning T4i JCB EcoMAX engine, built to provide ultimate performance without high fuel bills or costly exhaust after-treatment.

JCB sells more telescopic handlers than any other manufacturer in the world today, with all the reassurance, backup and strong residuals that this brings.

Improved efficiency.

JCB's hydraulic regeneration system uses a unique pilot-operated counterbalance valve to harness gravitational force, making lowering and retracting the boom more efficient than ever. The system reduces cycle times by up to 20% and fuel consumption by up to 4.4%.

The AGRI Loadall boasts high back-off brakes; these reduce viscous drag during roading and rehandling, boosting economy by as much as 2%.

Improved productivity.

With new features like our Bucket Control System and hydraulic auxiliary venting, as well as optional extras like Auto Smoothride (SRS), LED cab/boom worklights, and a range of hitches including Rockinger, you can benefit from greater productivity.

The AGRI Loadall's boom has hydraulic damping on both lift and retract functions, offering greater load retention.

By making the new AGRI Loadall easy to service, highly productive and sought-after the world over, we've reduced cost of ownership as much as possible.

Maintenance costs and downtime are reduced because the JCB EcoMAX T4i/IIIB engine fitted needs no after-treatment.

Improved comfort and ergonomics.

Choose our new hitch worklight (with LED option) for greater ease-of-use at night time or in low-light areas of the farm.

To aid multi-functioning, there's a selectable transmission dump on the footbrake.

Improved upward air expulsion has helped to reduce dust build-up in confined spaces.

Operating the new AGRI Loadall is highly ergonomic; there are clear instruments, a hi-res TFT screen, reduced external noise levels and a 7-speed ventilation fan. A lowered engine bonnet line, meanwhile, offers commanding visibility.

A GREAT PERFORMANCE.

THE AGRI LOADALL MAKES THE MOST EFFICIENT USE OF YOUR TIME AND MONEY. PRODUCTIVITY, PERFORMANCE ARE CLASS-LEADING, WITH VERSATILITY, VISIBILITY, FAST CYCLE TIMES IN ABUNDANCE, AS WELL AS UP TO 6000KG OF LIFT CAPACITY FOR SUPERB BULK RE-HANDLING.

Variable geometry turbo (VGT) technology minimises lag for excellent performance at low revs. VGT also delivers excellent speed pick-up and superior efficiency at higher revs.

There are plenty of options to tailor your 550-80 and 560-80 to different applications. These include tyres, hitches, LED Lights, heated screens and a larger 5m³ bulk handling bucket with the 560-80.

Making moves.

1 The AGRI Loadall is extremely manoeuvrable; the compact wheelbase and large steering lock angles save you valuable time, especially where space is limited.

2 4WD is standard, so traction is assured at all times. Optional 2WD is available at the flick of a switch too, minimising tyre wear and fuel use when roading. For improved performance on difficult terrain, opt for a limited slip differential (LSD).

Innovative lifting technology.

3 Regenerative hydraulics help to ensure the very fastest cycle times, keeping farm output high.

4 Our brand-new Auto Smoothride System (SRS) engages the feature at speeds of 4km/h and above, improving load retention on the road or on uneven fields for increased comfort (and therefore productivity). You can also manually select SRS with the boom in any position.

Productive controls.

5 JCB's new bucket control system makes it easier to meter out or fully empty material from your bucket or muck fork via a feature button on the joystick. Material is ejected quickly and in a controlled way.

6 AGRI Loadalls have three selectable steer modes. There's two-wheel steer, which is ideal for high speed on the road; four-wheel steer for tight spaces; and crab-steer for manoeuvring close to walls and farm buildings. Operators can switch modes on the move without having to line the wheels up.

7 Joystick-mounted manual or automatic gear changes means you can shift gears, speed and direction quickly and easily with one ergonomic control. Hydraulic damping is fitted to the boom's extend, retract, lift and lower functions.

8 For added versatility, single boom auxiliary features comes as standard for powering a wide range of attachments. To improve productivity even more, we've now fitted an in-cab pressure release button for quicker attachment changes on the front hydraulic auxiliary service.

JCB's EcoMAX T4i/Stage IIIB engine is offered here in two sizes. The 4.4 litre unit delivers 125hp (93kW) and a massive 550Nm torque at low engine speeds. For ultimate performance, there's our new 145hp (108kW) 4.8 litre engine option with 560Nm torque.

A selectable transmission dump on the foot brake allows superb multi-functioning and increased power during loading or rehandling. Additional to the single auxiliary service you can opt for twin auxiliary services.

5

6

7

8

SAVING TIME AND MONEY.

THE NEW 550-80 AND 560-80 ARE EXTREMELY EFFICIENT BOTH IN OWNERSHIP AND IN OPERATION. DESIGNED TO GIVE YOU THE MAXIMUM POSSIBLE RETURN ON YOUR INVESTMENT, THEY OFFER GREAT FUEL EFFICIENCY, UNPARALLELED RESALE VALUE AND LOW RUNNING COSTS.

EcoMAX produces its peak torque at engine speeds as low as 1500-1600 rpm for fuel-efficient matching of the transmission and hydraulics.

JCB's innovative Clean Burn technology helps our engines to meet Tier 4i/Stage IIIB regulations without exhaust after-treatments like DPFs. This means, of course, that costly DPF regeneration or replacement is never a worry.

The economics of EcoMAX.

1 Whether your 550-80 or 560-80 comes fitted with a 93 or 108kW EcoMAX engine, both will have a hydraulic variable speed cooling fan as standard. This automatically reacts to ambient temperature, adjusting the fan speed for maximum economy and reduced noise.

2 The engine can be remapped to run on lower grade fuels, which means your AGRI Loadall can be resold across many different territories, with a corresponding boost to residual values.

3 All AGRI Loadall operators have access to all the fuel information they need via the dash LED screen. By pressing the information button, the driver can see fuel remaining, fuel used since the last fill-and-reset, and current average fuel consumption.

1

2

3

Hydraulic efficiency.

4 JCB's new hydraulic regeneration system uses a unique pilot-operated counterbalance valve to harness gravitational force, making lowering and retracting the boom more efficient than ever. The system reduces cycle times by up to 20% and fuel consumption by up to 4.4%.

5 We believe that even high performance features should have economy at their heart. That's why our robust Z-bar linkage doesn't just offer an incredible 6.5 tonnes of tearout force; it also maximises bucket fill for superb efficiency in rehandling applications.

6 The 550-80 and 560-80 boasts high back-off brakes; these reduce viscous drag during roading and rehandling, boosting economy by as much as 2%.

Low cost of ownership.

7 By investing in a JCB Loadall, you're investing in a machine that's sought-after all over the world for its legendary productivity and build quality. This well-earned reputation keeps residual values high.

HYDRAULIC CYCLE TIMES (560-80 UNLADEN)	
	Seconds
Lift	7.4
Lower	8.3
Extend	8.3
Retract	5.9
Bucket dump	2.8
Bucket crowd	3

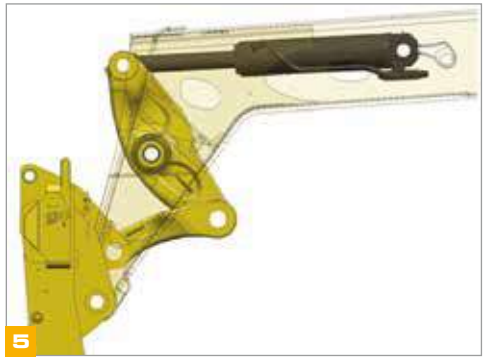

STRENGTH IN DEPTH.

WE KNOW THAT AGRICULTURAL WORK CAN BE INTENSIVE AND ARDUOUS. THE NEW 550-80 AND 560-80 ARE THEREFORE BUILT TO BE AS TOUGH AS POSSIBLE, USING TOP QUALITY COMPONENTS AND INNOVATIVE MANUFACTURING PROCESSES TO ENSURE A LONG AND PRODUCTIVE SERVICE LIFE.

Hydraulic hoses can be vulnerable to damage, so ours are intelligently routed through the boom for maximum protection.

The one-piece fully welded chassis maximises strength and minimises weight. The boom is mounted low in the chassis, providing an extremely rigid structure and maximum over-the-shoulder visibility.

1

Built to last.

1 We've fitted a tough inverted U-shaped boom pressing with fully welded closing plates and large overlaps of over 1.0m. For extra strength, we've reduced the number of joints and stress points across our integrated boom nose and one-piece closing plate.

2 Heavy-duty axle feet help an AGRI Loadall to absorb the immense stresses generated during continuous heavy material re-handling applications. Keyhole castings hold the tilt and extension rams to further improve overall structural integrity.

Out of harm's way.

3 The bonnet is side-mounted and recessed to keep it out of harm's way.

4 Rear lights on these Loadalls fold up and away from potential hazards on-site.

5 If you need added protection from falling objects, choose our front and top screen roof guards.

2

3

4

5

Passing the tests.

7 The new Loadall range's stringent testing programme has included prolonged high stress loading of the chassis, boom and other key components, as well as repeated transmission use over thousands of cycles and intensive rolling road work.

8 Because we make our own hydraulic rams, cabs, transmissions, engines, chassis and booms; JCB Loadalls benefit from perfect harmony of key components, bringing with it optimised reliability and performance.

9 Our hydraulic cylinders have friction-welded eye-ends for extra strength, plus all pivots use hardened pins.

10 We use state-of-the-art manufacturing processes like robot machining, precision paint technology and innovative assembly techniques to achieve the very highest levels of quality.

JCB engines are tried and tested. We've built over 200,000 DIESELMAX engines since 2004, and we've tested our latest EcoMAX units for 110,000 hours in 70 different machines across the toughest applications and environments.

To provide long-term corrosion protection, we dip our cabs in electrophoretic alloy before starting the painting process.

THE COMFORTABLE FAVOURITE.

OPERATOR COMFORT IS CENTRAL TO PRODUCTIVITY. FOR THESE REASONS, THESE AGRI LOADALLS HAVE ONE OF THE LARGEST CABS AROUND, WITH LOW NOISE LEVELS, EXCELLENT AIR FLOW, OPTIONAL AIR CONDITIONING, AND A FULLY ADJUSTABLE DRIVING POSITION.

In total control.

1 Single-lever servo-assisted electro hydraulic controls provide fully proportional, smooth and precise command of both boom and auxiliary functions on the 550-80 and 560-80. The single lever control will be cab or an option of seat mounted, ensuring the best controllability on the market. Changing gears and switching direction are all done via the joystick, making manoeuvres fast and easy.

2 Backlit switches ensure quick and accurate control recognition, even in the dark.

3 For intuitive automotive-style ergonomics (and, therefore, greater usability), we've fitted our latest Loadalls with new instruments, a hi-res TFT screen and backlit switches. Operators can now enjoy at-a-glance instrument recognition and improved visibility even at night.

4 A tilting steering column with optional telescopic adjustment helps operators to find the best possible driving position.

A comfier operator.

5 Our 7-speed fan heater has plenty of scope for adjustment; this helps to create a more comfortable – and therefore productive – operator environment.

6 Optional front and rear worklights give good all-round illumination, while our optional LED lights allow ultimate productivity in the dark. We even offer a rear hitch worklight option.

7 All-round visibility is excellent, courtesy of direct glazing and a large roof screen, as well as a low bonnet.

8 A new exterior top door slam latch means you can now close the upper door from outside.

The standard-fit armrest offers increased comfort and support during boom operation.

Opt for our deluxe cab trim and you'll get extra rear seat storage and a cubby box mounted to the off-side rear of the seat.

We fit tinted cab glass to these machines as standard; this reflects 30% of the sun's energy, boosting operator comfort.

The new-look exterior isn't purely cosmetic; the cooling fan airflow is now angled upwards, reducing dust build-up. The EcoMAX's DPF-free design keeps the bonnet line low for maximum visibility.

6

6

7

8

THE SAFER CHOICE.

YOU CAN SAVE MORE THAN JUST TIME AND MONEY WITH THESE AGRI LOADALLS. YOU CAN SAVE OPERATORS, MACHINERY AND BYSTANDERS FROM POTENTIAL HAZARDS TOO. THAT'S BECAUSE JCB LOADALLS ARE FITTED WITH STRINGENT SAFETY MEASURES, AS WELL AS EFFECTIVE SECURITY TECHNOLOGY TO GUARD AGAINST THEFT.

Safety first.

1 Control is increased even further with automotive-inspired braking. This new system sees already class-leading braking performance enhanced with the introduction of power brakes, providing proportional braking throughout the pedal travel and resulting in improved braking effort and safe, stable stopping.

2 Adaptive Load Control technology automatically controls hydraulic operation, helping to maintain the longitudinal stability.

3 Excellent cab access, with three points of contact and ergonomically positioned grabs, handles and two foot steps.

4 Bystanders are safeguarded by our standard-fit reversing alarm.

5 An AGRI Loadall has hose burst check valves (HBCVs) to protect the rams from collapse in the event of a hose failure.

6 The low boom profile and pivot means that operators get excellent rear visibility; there's also a full set of side and rear-view mirrors to enhance all-round visibility and safety compliance.

LESS SERVICING, MORE SERVICE.

KEEPING DOWNTIME TO A MINIMUM IS CRUCIAL TO ACHIEVING ULTIMATE PRODUCTIVITY, SO THE JCB 550-80 AND 560-80 ARE EXCEPTIONALLY EASY TO SERVICE AND MAINTAIN. KEY COMPONENTS ARE HARD-WEARING AND STRAIGHTFORWARD TO ACCESS.

Routine servicing.

1 Most Tier 4i/Stage IIIB engines use exhaust after-treatment like a DPF or SCR. EcoMAX doesn't, removing the need for costly and time-consuming AdBlue fluid level maintenance or DPF replacement; this helps to keep residual values high.

2 All daily checks and grease points are easily located at ground level on these Agri Loadalls; specify our optional central greasing system for even faster and easier serviceability.

3 The battery is protected by a hinged bolt shut door, but still giving easy access to the battery.

4 Filling the diesel tank is straightforward and can be done from ground level; there's also an integral pre-filter in the filler neck to guard against contaminated fuel.

5 A dry lubricant system means our wear pads are extremely durable, with service intervals of 500 hours.

6 The filters on these Agri Loadalls (engine oil, hydraulic oil and fuel) are centrally located for fast, easy servicing. The air filter is easily accessible, and its double-element design simplifies cleaning.

7 JCB LiveLink telematics technology enables all Loadalls to report fuel economy, idle time and engine load data.

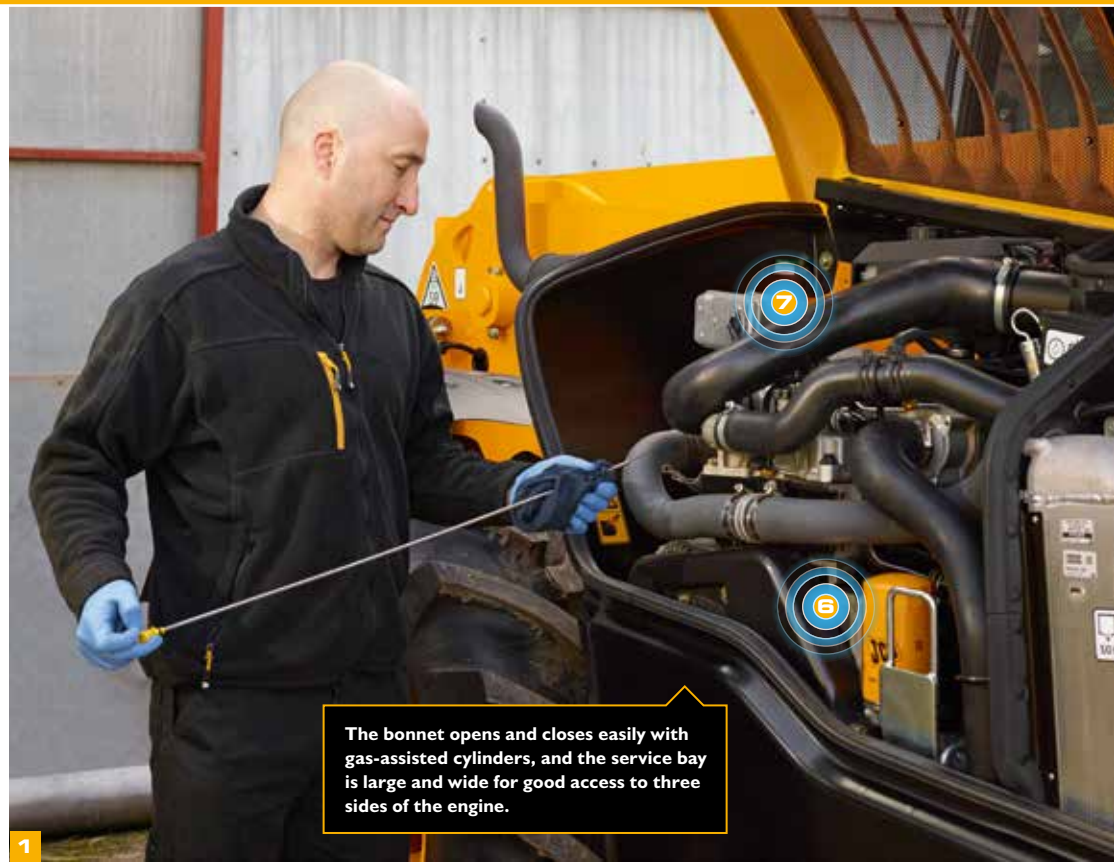

The bonnet opens and closes easily with gas-assisted cylinders, and the service bay is large and wide for good access to three sides of the engine.

1

2

3

4

5

LIVELINK, WORK SMARTER.

LIVELINK IS AN INNOVATIVE SOFTWARE SYSTEM THAT LETS YOU MANAGE JCB MACHINES REMOTELY – ONLINE, BY EMAIL OR BY MOBILE PHONE. ACCESS EVERYTHING FROM MACHINE ALERTS TO FUEL REPORTS AND HISTORY INFORMATION, WITH ALL DATA STORED AT A SECURE CENTRE.

Productivity and cost benefits

All LiveLink equipped Tier 4i Loadall machines built are now able to report fuel economy, idle time and engine load data through the LiveLink web portal, helping you reduce your fuel usage, saving you money and improving productivity. Machine location information can help improve efficiency and perhaps even reduce insurance costs.

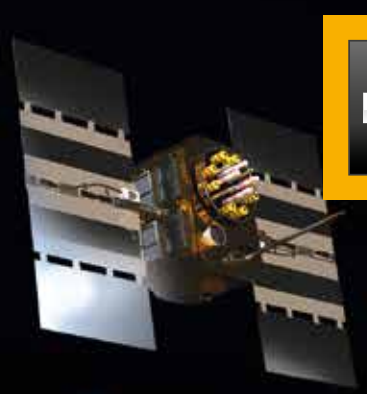

Maintenance benefits

Manage machine maintenance easily – accurate hours monitoring and service alerts improve maintenance planning, while real-time location data helps you manage your fleet. Critical machine alerts and maintenance history records are also available.

Security benefits

Livelink's real-time geofencing alerts tell you when machines move out of predetermined zones, and real-time curfew alerts inform you of unauthorised usage. Further benefits include real-time location information and PIN code management (to remotely authorise usage – perfect for plant hire).

VALUE ADDED.

JCB'S WORLDWIDE CUSTOMER SUPPORT IS FIRST CLASS. WHATEVER YOU NEED AND WHEREVER YOU ARE, WE'LL BE AVAILABLE QUICKLY AND EFFICIENTLY TO HELP MAKE SURE YOUR MACHINERY IS PERFORMING TO ITS FULL POTENTIAL.

1

2

3

1 Our Technical Support Service provides instant access to factory expertise, day or night, while our Finance and Insurance teams are always on hand to provide fast, flexible, competitive quotes.

2 The global network of JCB Parts Centres is another model of efficiency; with 16 regional bases, we can deliver around 95% of all parts anywhere in the world within 24 hours. Our genuine JCB parts are designed to work in perfect harmony with your machine for optimum performance and productivity.

3 JCB Assetcare offers comprehensive extended warranties and service agreements, as well as service-only or repair and maintenance contracts. Irrespective of what you opt for, our maintenance teams around the world charge competitive labour rates, and offer non-obligation quotations as well as fast, efficient insurance repair work.

Note: JCB LIVELINK and JCB ASSETCARE may not be available in your region, so please check with your local dealer.

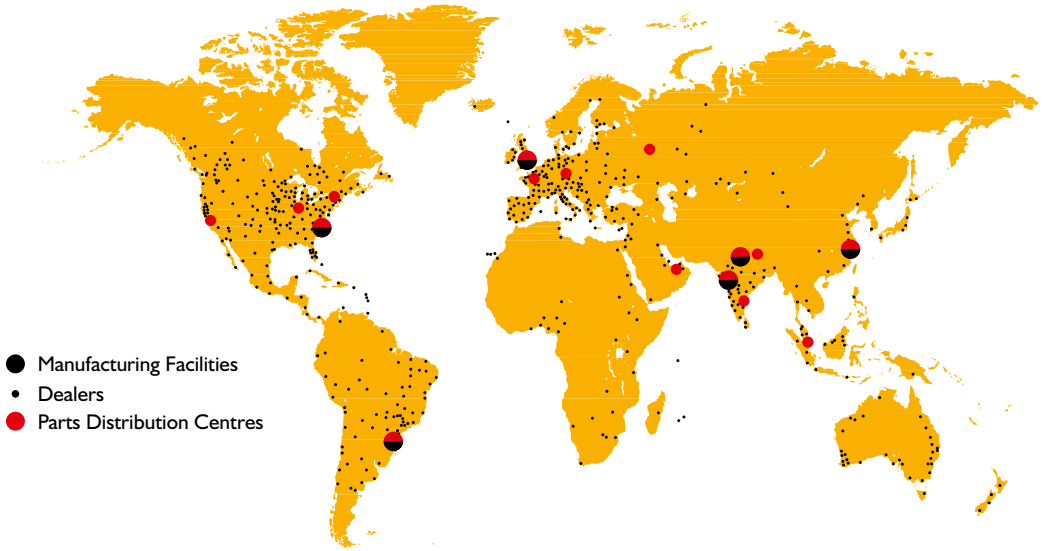

STATIC DIMENSIONS

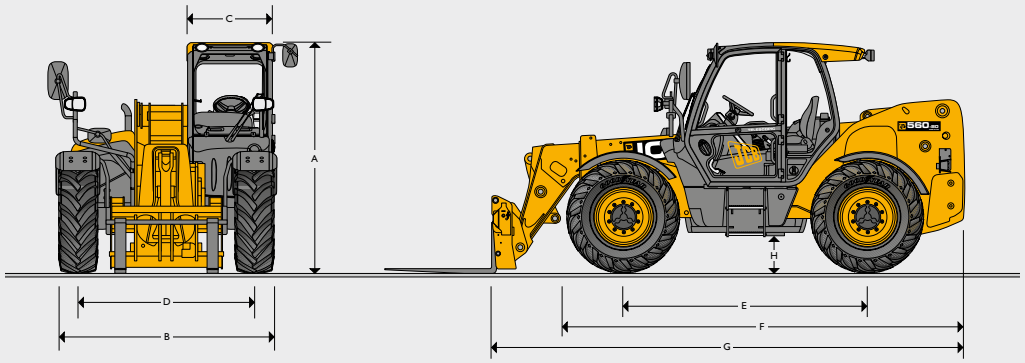

			550-80	560-80
A	Overall height	m	2.59	
B	Overall width (over tyres)*	m	2.42	2.54
C	Inside width of cab	m	0.94	
D	Front track	m	1.98	
E	Wheelbase	m	2.75	
F	Overall Length to front of tyres	m	4.42	
G	Overall length to front of carriage	m	5.27	
H	Ground clearance	m	0.4	
	Outside turn radius (over tyres)	m	4.1	
	Carriage rollback angle	degrees	47	
	Carriage dump angle	degrees	33	
	Weight	kg	10150	10750
	Tyres		440/80 R24	500/70 R24

* Dependant upon tyre specified

LIFT PERFORMANCE

550-80

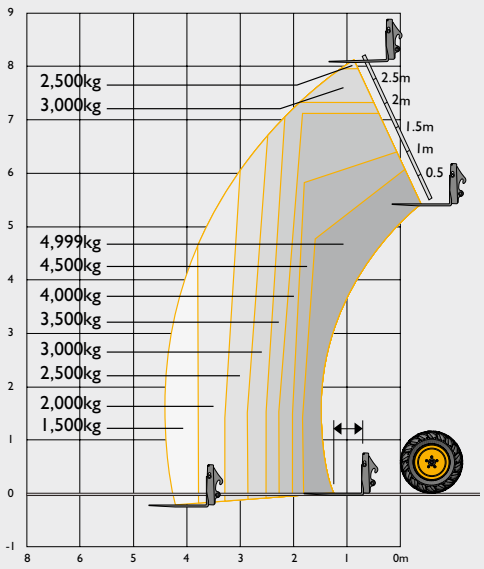

560-80

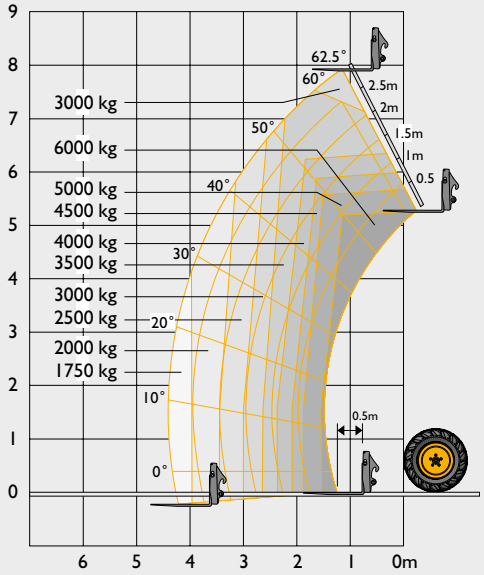

		550-80	560-80
Maximum lift capacity	kg	4999	6000
Lift capacity to full height	kg	2500	3000
Lift capacity at full reach	kg	1500	1750
Lift height	m	8.1	7.9
Reach at maximum lift height	m	0.97	0.92
Maximum forward reach	m	4.47	4.41
Reach with 1 tonne load	m	4.47	4.41
Placing height	m	7.45	6.64

Complies with stability test EN 1459 Annex B.

ENGINE

Emissions level		Tier 4i/Stage IIIB
Manufacturer		JCB
Displacement	litres	4.4/4.8
No of Cylinders		4
Bore size	mm	103/106
Stroke	mm	132/135
Aspiration		TCA
Power rating		
Power @ 2200rpm	kW (hp)	93 (125)/108 (145)
Torque rating		
Torque @ 1500rpm	Nm (lb/ft)	550 (406)/560 (413)
Engine oil service intervals		500 hours

TRANSMISSION

JCB powershift transmission incorporating torque converter, bevel box and a 4 speed powershift gearbox in one resiliently mounted unit. Manual gear shift incorporated onto the single lever joystick. Travel speed 38kph (dependant upon tyre selection).
Permanent 4 wheel drive. **Front and rear drive axles:** Epicyclic hub reduction drive/steer axles with torque proportioning differentials.

HYDRAULICS

Operating system pressure	bar	260	
Main hydraulics	l/min	140	
Pump	l/min	Variable	
Loader controls		Cab mounted single lever joystick (Seat mounted optional) – Electric servo control of all lift end functions.	
Hydraulic cycle times		**seconds**	
		550-80	**560-80**
Boom raise		7.4	
Boom lower		5.9	8.3
Extend		8.3	
Retract		5.9	
Bucket dump		2.8	
Bucket crowd		3	

ELECTRICAL SYSTEM

System voltage	Volt	12
Alternator output	Amp hour	95
Battery capacity	Amp hour	110

Full road lighting. Reversing light. Directional indicators. Hazard warning. Reverse alarm.

SERVICE CAPACITIES

Fuel tank	litres	146
Hydraulic tank	litres	112
Engine oil sump	litres	14
Engine coolant system	litres	23

BRAKES

Service brakes: Hydraulically activated power brakes, self-adjusting, oil-immersed in-board multi-disc type on front and rear axles.

Parking brake: Hand operated oil immersed disc type.

BOOM AND CARRIAGE

Boom is manufactured from high tensile steel. Low maintenance, hard wearing pads. JCB Q-fit self-levelling carriage with lever operated pin locking accepts pallet forks and a wide range of attachments. One boom end auxiliary hydraulic service fitted as standard.

SAFETY CHECK VALVES

Fitted to carriage tilt, telescopic and boom lift rams.

NOISE AND VIBRATION

		Measurement conditions
Noise at the operator station (LpA)	78dB	In accordance with ISO6369 in a test defined in 2000/14/EC
Noise emission from the machine (LWA)	107dB	External noise determined in accordance with test defined in 2000/14/EC
Whole body vibrate emission	$0.42m^2$	In accordance with ISO 2631-1:1997

STEERING

Hydrostatic power steering with power track rods on both axles. Three steer mode options: front wheel steer; all wheel steer; crab steer: operated from in the cab by a selection switch, with automatic alignment.

CAB

Quiet, safe and comfortable cab conforms to ROPS ISO 3471 and FOPS ISO 3449. Tinted glass all round with laminated front and roof screen. Roof bars, front, rear and roof screen wash/wipe and heater/screen demister. Opening rear window. Audio-visual warning system for coolant temperature, water in fuel, engine oil pressure, air cleaner, battery charge, transmission oil temperature and pressure. Brake charge, hourmeter and road speed indicator. Engine temperature, fuel gauge and clock. Adjustable steer column with stalk bar powershift change and forward reverse shuttle. Floor mounted throttle pedal. Adjustable deluxe suspension seat with adjacent park brake. Automatic eye level audio-visual load moment indicator warning system receiving a signal from a load sensor on the rear axle. This system continuously monitors the machine's forward stability and leaves the operator in control at all times.
Hydraulic controls: Cab mounted single lever servo joystick, incorporating forward/neutral/reverse, transmission disconnect, with progressive extend/retract and auxiliary incorporating constant flow facility. Seat mounted single lever servo joystick incorporating forward/neutral/reverse, transmission disconnect, with progressive extend/retract and auxiliary incorporating constant flow facility (optional).

OPTIONS AND ACCESSORIES

Options: Front, rear and boom working lights, rotating flashing beacon, fire extinguisher, 26" agricultural and industrial tread pattern tyre option, 120 AH battery, radial industrial tyres, electrical 2/4WD select, limited slip differential in front axle, windscreen and roof guard, air suspension seat, roof and front screen blind, radio kit, air conditioning, 2 speed and intermittent front wash/wipe, high flow auxiliary, Smoothride system, towing facility with trailer lighting package, direct mount bucket, variable speed fan and reversing fan as standard, optional auto reverse fan, 2nd boom auxilliary, carriage options available – contact your local dealer.

Attachments: Contact your local dealer for details of the comprehensive range.
Adaptive load control for EU territories conforms to EN15000.

OPTIONS CHART

Machine model		550-80	550-80 BIOMASTER	560-80	560-80 BIOMASTER
Standard features	Regenerative hydraulics (lower & retract)	●	●	●	●
	End damping (lift, lower, extend & retract)	●	●	●	●
	Quick aux venting	●	●	●	●
	Increased diameter pipework all boom functions - 1/2" to 5/8"	●	●	●	●
	Bucket Control System	●	●	●	●
Options	Auto SRS	○	○	○	○
	Rockinger hitch range (6 types)	○	○	○	○
	LED work lights (front & rear)	○	●	○	●
	LED boom works lights (boom)	○	●	○	●
	Rear hitch light (if hitch selected)	●	●	●	●
	LED rear hitch light (if hitch selected)	○	○	○	○
	5.0 m^3 bucket	–	–	○	○
Biomaster	Auto reversing fan	○	●	○	●
	Boom nose cover	○	●	○	●
	Air conditioning	○	●	○	●
	Clean air kit	○	●	○	●
	Remote greasing	○	●	○	●

Standard ● Option ○

JCB AGRI
JCB
JCB
JCB

ONE COMPANY, OVER 300 MACHINES.

Your nearest JCB dealer

9999/5857 en-GB 03/15 Issue 1

AGRI LOADALL 550-80/560-80 AGRI PLUS

Gross power: 93–108kW (125–145hp) Lift capacity: 4,999kg – 6,000kg Lift height: 7.9m – 8.1m

JCB Agriculture, Rocester, Staffordshire ST14 5JP.
Tel: +44 (0)1889 590312 Email: salesinfo@jcb.com

Download the very latest information on this product range at: www.jcb.com

facebook.com/JCBAg @JCBAgriculture JCBAgriculture youtube.com/JCBAgriculture

©2014 JCB Sales. All rights reserved. No part of this publication may be reproduced, stored in a retrieval system, or transmitted in any form or by any other means, electronic, mechanical, photocopying or otherwise, without prior permission from JCB Sales. All references in this publication to operating weights, sizes, capacities and other performance measurements are provided for guidance only and may vary dependant upon the exact specification of machine. They should not therefore be relied upon in relation to suitability for a particular application. Guidance and advice should always be sought from your JCB Dealer. JCB reserves the right to change specifications without notice. Illustrations and specifications shown may include optional equipment and accessories. All images are correct at time of print. The JCB logo is a registered trademark of J C Bamford Excavators Ltd.

JCB