Model

G5-18A

TELEHANDLER

Performance

Rated Capacity
At 24 in. (610 mm) load center, 5,500 lb (2,495 kg)

Maximum Lift Height
18 ft (5.5 m)

Maximum Forward Reach
10 ft 10 in. (3.3 m)

Capacity at Maximum Lift Height
4,400 lb (1,196 kg)

Capacity at Maximum Forward Reach
1,850 lb (839 kg)

Lift Speed (boom retracted)
Up: 6.2 sec
Down: 4.3 sec

Boom Speed
Extend: 6.3 sec
Retract: 3.4 sec

Travel Speed Forward
17 mph (27.4 kmph)

Drawbar Pull
8,700 lb (3,946 kg)

Breakout Force
7,650 lb (3,470 kg)

Operating Weight with 48" carriage and forks
10,800 lb (4,899 kg)

Standard Specifications

Engine

Make and Model	Perkins 1104D
Fuel	No. 2 Diesel
Cycles	4
No. of Cylinders	4
Displacement	268.4 cu in. (4.4 L)
Rated Speed	2,200 rpm
Max. Gross BHP	84 hp (63 kW)
Fuel Tank	24 gal (91 L)

Engine Filters
Two-stage dry air cleaner — centrifugal pre-cleaner with continuous dust ejector and replaceable dry filter element.
Visual service indicator.

Glow Plugs

Electrical System
Voltage: 12V
Alternator: 75 amp
Battery: 950 cold cranking amps at 0°F

Transmission
Hydrostatic

Axles
High bias limited slip differential on front axle.
Planetary on front and rear axle.

Service Brakes
Inboard wet disc brakes on front axle.

Parking Brakes
Wet disc spring-applied hydraulic release.
Light on dash indicates when brake is on.

Tires
Standard: 12 x 16.5

Cab
Certified ROPS/FOPS structure, adjustable suspension seat.

Steering 4-Wheel
Operator selectable 4-wheel circle, 4-wheel crab, 2-wheel front.

Instruments
Indicators for machine hours, fuel-level, steering pressure, alternator, pre-heat, coolant temperature, parking brake and oil pressure
Reverse motion alarm.
Panel and switches are illuminated for night operation

Controls
Grouped for operator comfort and convenience.
Single joystick proportional controls.

Hydraulic System-Implement
Single-section gear pump.
17 gal (64.4 L) system capacity.
10 micron filter with visual service indicator and suction strainer.
Lift, crowd, and tilt cylinders have holding valves intended to prevent dropping of load in the event of hose failure.

Auxiliary Hydraulic Circuit
Consists of valves, controls and hydraulic lines

Attachment Tilt
125 degrees

Accessories & Options

Enclosed Cab
Battery Disconnect Switch
Road Light Package
Work Light Package
Skylight/Rear Wiper Package
Radio Ready Kit (Enclosed Cab Only)
Molded Floor Mat
Tow Hitch w/trailer plug
Tow Hitch w/automatic pin & trailer plug
Fenders
Brick Guard
Air Conditioning
Block Heater
Tilt Steering
Hydraulic Quick Switch
Rear Auxiliary Hydraulics
Universal Skid Steer Coupler
Tire Options:
Foam-Filled
14 x 17.5

Attachments

Standard Carriage
48 in. (1.2 m)

Side Tilt Carriage
48 in. (1.2 m)

Pallet Forks
2 x 4 x 48 in. (51 mm x 102 mm x 1.2 m)

Lumber Forks
1.5 x 6 x 48 in. (38 mm x 152 mm x 1.2 m)

Cubing Forks
2 x 2 x 48 in. (51 mm x 51 mm x 1.2 m)

General Purpose Bucket
1.0 cu yd (0.76 m^3) — 73 in. (1.85 m)

Light Material Bucket
1.7 cu yd (1.29 m^3) — 72 in. (1.8 m)

Grapple Bucket
1.0 cu yd (0.76 m^3) — 72 in. (1.8 m)

Crane Hook

Fork Mounted Work Platform

Universal Skid Steer Adapter

Courtesy of Crane.Market

Model
G5-18A
TELEHANDLER

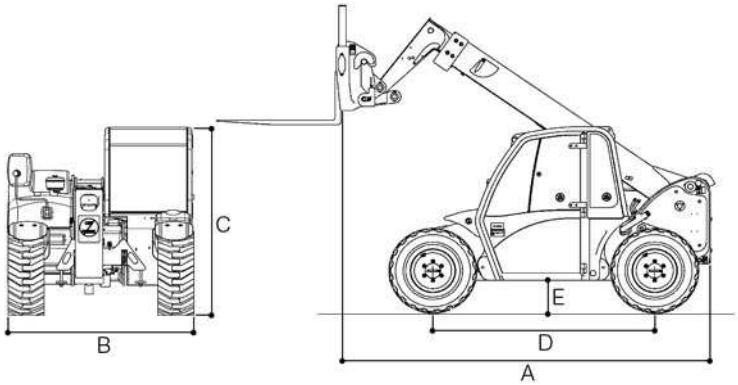

Dimensions

A. Length (less forks)	144.2 in. (3.7 m)
B. Width	71.5 in. (1.8 m)
C. Height	75.6 in. (1.9 m)
D. Wheelbase	90.0 in. (2.3 m)
E. Ground Clearance	10.8 in. (274 mm)
F. Outside Turning Radius	126.0 in. (3.2 m)

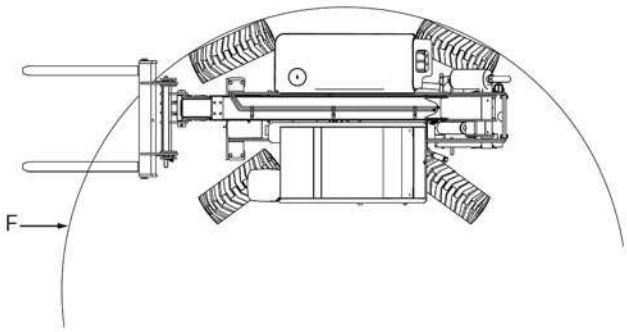

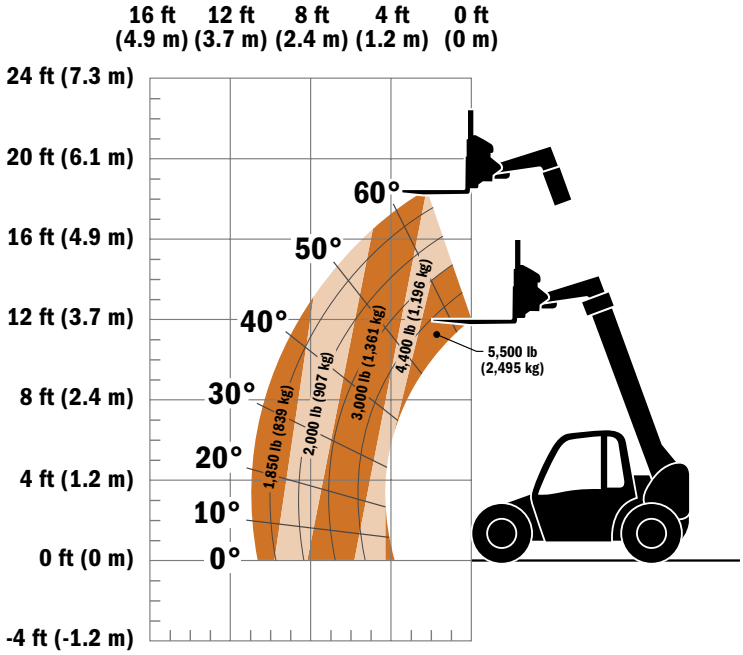

Note: This is a preliminary chart.

IMPORTANT

Rated lift capacities shown are with machine equipped with carriage and pallet forks. The machine must be level on a firm surface with undamaged, properly inflated tires. Machine specifications and stability are based on rated lift capacities at specific boom angles and boom lengths. (If specifications are critical, the proposed application should be discussed with your dealer.)

DO NOT exceed rated lift capacity loads, as unstable and dangerous machine conditions will result.

DO NOT tip the machine forward to determine the allowable load.

Use only JLG approved attachments with proper material handler model/attachment load capacity charts displayed in the operator's cab. OSHA requires all rough terrain forklift operators be trained according to OSHA 29 CFR 1910.178 (1).

Due to continuous product improvements, JLG Industries reserves the right to make specification and/or equipment changes without prior notification. This machine meets or exceeds ASME B56.6-2005 as originally manufactured for intended applications.

Form No.: G5-18A-1007
Part No.: 3132221
Printed in USA

JLG Industries, Inc.
1 JLG Drive
McConnellsburg, PA 17233-9533
Telephone 717-485-5161
Toll-free in US 877-JLG-LIFT
Fax 717-485-6417
www.jlg.com

An Oshkosh Truck Corporation Company

Courtesy of Crane.Market