R1370

ROTATING TELEHANDLER

KEY FEATURES & BENEFITS

- 3-in-1 Capability: Along with material handling, rotating telehandlers function as mobile elevating work platforms and rough-terrain cranes.
- Confidence-Inspiring Technology: Features automatic attachment recognition, a Load Management Information System (LMIS) and Load Stability Indicator (LSI).
- 360-Degree Continuous Rotation: Full rotation of the upper frame allows for both horizontal and vertical lifting.
- Standard Attachments and Accessories: 48-in standard carriage and forks, outrigger pads, LED worklights, and boom camera.

ATTACHMENTS

General Purpose Bucket	94.5-in, 2.0-cu yd
Truss Boom	8-ft, 2,640-lb capacity / 2.4-m, 1,200-kg capacity
Truss Boom with Winch	9-ft / 2.7-m 2,000-lb or 3,300-lb capacity / 900-kg or 1,500-kg capacity
Truss Boom with Winch	16-ft, 1,300-lb capacity / 4.8-m, 600-kg capacity
Standard Carriage	48-in / 1.2-m
Fork Positioning Carriage	48-in / 1.2-m
360 Degree Rotating Carriage	48-in, 5,500-lb capacity / 1.2-m, 2,500-kg capacity
Work Platform	7-ft, 660-lb capacity / 2.1-m, 300-kg capacity
Extendable Trilateral Work Platform	8-ft to 13-ft 6-in / 2.4-m to 4.1-m 660-lb or 1,765-lb capacity / 300-kg or 800-kg
Coupler Mounted Winch	11,000-lb / 5,000-kg
Coupler Mounted Hook	13,200-lb / 6,000-kg
Mixing Bucket	1,690-lb / 768-kg max capacity
Hydraulic Opening Ladle	2,904-lb / 1,320-kg max capacity

ACCESSORIES & OPTIONS

- Brick Guard
- Boom Brushes
- Dual Auxiliary Hydraulics
- Hydraulic Coupler
- White Noise Back Up Alarm
- Woodcracker Ready*

*For use with Westtech Woodcracker CS 750 Smart

STANDARD SPECIFICATIONS

Performance

Rated Capacity	13,200-lb / 6,000-kg
Maximum Lift Height	67-ft / 20.5-m
Load at Max Height	5,500-lb / 2,500-kg
Maximum Forward Reach	59-ft 6-in / 18.1-m
Load at Max Reach	1,500-lb / 700-kg
Frame Leveling	±5.5 Degrees
Lift Speed Up	21.9 seconds
Lift Speed Down	13.8 seconds
Boom Speed – Extend	31.2 seconds
Boom Speed – Retract	17.4 seconds
Top Travel Speed (Foam-Filled)	12.4 mph / 20 km/h
Top Travel Speed (Air Tires)	24.5 mph / 40 km/h
Drawbar Pull	22,500-lb / 100-kN
Outside Turning Radius	14-ft 6-in / 4.4-m
Operating Weight	39,240-lb / 17,800-kg

Engine

Make and Model	Perkins 904J-E36TA StageV
No. of Cylinders	4
Displacement	221 cu in / 3.6 L
Gross Power Basic	134 hp / 100 kW
Maximum Torque @ 1,500 rpm	406 lb-ft / 550 Nm
Fuel Tank Capacity	47.5 gal / 180 L

Transmission

Hydrostatic 2-speed

Axles

Trunnion mounted planetary 35-Degree steer axles
High bias limited slip differential on front axle

Brakes

Service breaks are inboard wet disc brake on front and rear axles and include inching.
Parking brakes are wet disc spring-applied hydraulic release on rear axle.

Tires

Standard	Foam Filled Tires MPT 503 18 x 22.5 Lug Tread
Optional	Air Tires AE77 445/65 R22.5 Turf Tread
	Air Tires MPT 503 18 x 22.5 Lug Tread

Standard Features

- 3-in Seatbelt
- Adjustable Seat
- Boom Mounted Camera System
- Certified ROPS/FOPS Structure
- Dual Joystick Controls
- Enclosed Cab
- Horn
- LED Motion / Amber Beacon (CS550) with ClearSky Smart FleetTM Hardware
- LED Worklight Package
- LED Motion / Amber Beacon (CS550) with ClearSky Smart FleetTM Hardware
- Outrigger Pads
- Reversing Camera
- Retractable Sunscreen
- Road Lights
- Tilt & Auxiliary Hydraulics on Joystick

Steering 4-Wheel

Power steering
Operator Selectable 4-Wheel Circle, 4-Wheel Crab, 2-Wheel Front

Instruments

- Hourmeter
- Voltmeter
- Fuel Gauge
- DEF Gauge
- Engine Oil Pressure Gauge
- Temperature Gauge

Hydraulic System-Implement

Capacity	71.3 gal / 270 L
Max. Auxiliary Flow to the Boom Head	21.1 gpm / 80 lpm

Load sense piston pump. Auxiliary hydraulics used for all attachments equipped with cylinders or other hydraulic components.

R1370

ROTATING TELEHANDLER

DIMENSIONS

All dimensions are approximate

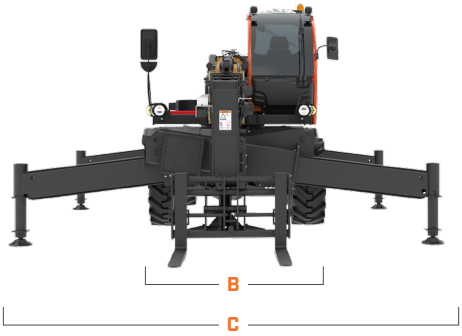

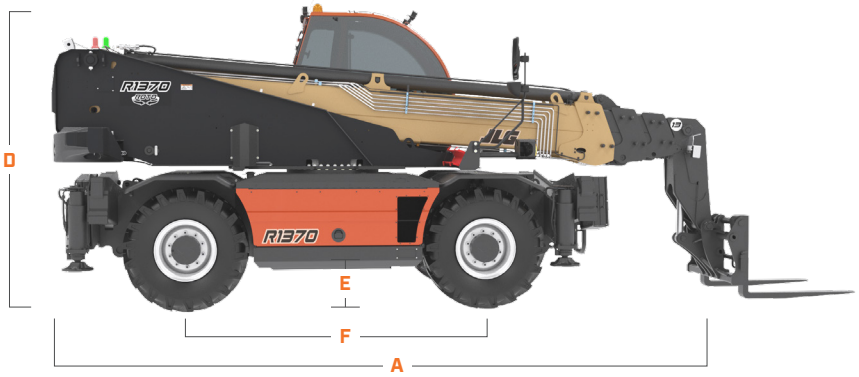

A.	Machine Length	281.5-in / 7150-mm	**D.**	Machine Height	119.3-in / 3030-mm
B.	Machine Width	93.7-in / 2380-mm	**E.**	Ground Clearance	14.2-in / 360-mm
C.	Machine Width (Outriggers fully deployed)	199.6-in / 5070-mm	**F.**	Wheelbase	116.1-in / 2950-mm

LOAD CHART

Outriggers Down

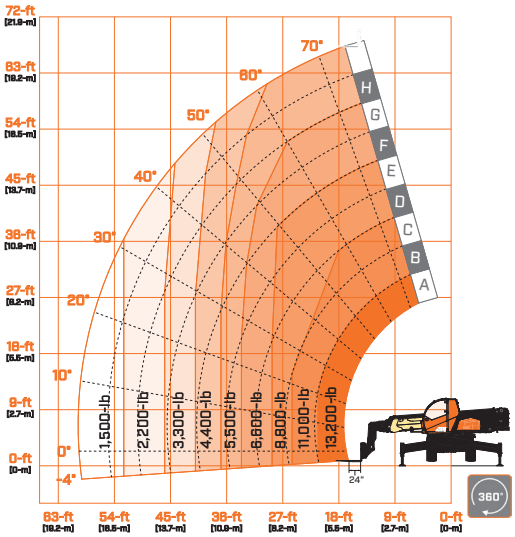

Outriggers Up

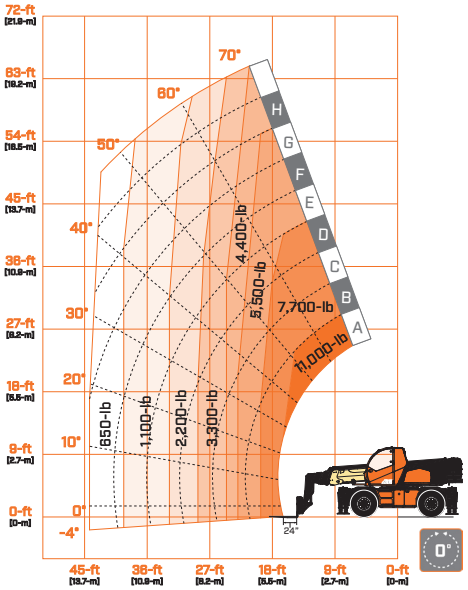

THE JLG 1,2&5 WARRANTY

We provide coverage for one (1) full year on the entire machine, two (2) full years or 2,000 hours on the drivetrain and cover all specified major structural components for five (5) years. Due to continuous product improvements, we reserve the right to make specification and/or equipment changes without prior notification.

JLG INDUSTRIES, INC.
Toll-free US 877-JLG-LIFT
JLG.com

An Oshkosh Corporation Company

Part No. 3132257 | R0225_7