Technical sheet :

MLT 630-115 V CP

MANITOU
HANDLING YOUR WORLD

Capacities		Imperial
Max. capacity	Q	6614 lb
Max. lifting height	h3	19 ft 8 in
Max. outreach		11 ft 3 in
Reach at max. height		2 ft 11 in
Breakout force with bucket		4914 daN
Weight and dimensions		
Unladen weight (with forks)		14639 lb
Ground clearance	m4	11 in
Wheelbase	y	8 ft 10 in
Overall length to carriage (with hitch)	l11	15 ft 8 in
Overall length to carriage (without hitch)	l3	15 ft 2 in
Front overhang		4 ft 1 in
Overall width	b1	6 ft 9 in
Overall cab width	b4	3 ft 1 in
Overall height	h17	7 ft
Tilt-down angle	a5	133 °
Tilt-up angle	a4	13 °
External turning radius (over tyres)	Wa1	12 ft
Standard tires		Alliance - A580 - 400/70 R20 149A8
Drive wheels (front / rear)		2 / 2
Steering wheels (front / rear)		2 / 2
Performances		
Lifting		6.50 s
Lowering		4.90 s
Extension		5.80 s
Retraction		5.30 s
Crowd		3.20 s
Dump		2.60 s
Engine		
Engine brand		Deutz
Engine norm		Stage V
Engine model		TCD 3.6 L4
Number of cylinders - Capacity of cylinders		4 - 221 in³
I.C. Engine power rating / Power		116 Hp / 85 kW
Max. torque / Engine rotation		339 ft/lbs @1600 rpm
Drawbar pull (Laden)		6500 daN
Reversible fan		Standard
Engine cooling system		4 radiators (water + intercooler + oil + fuel)
HVO validated (according to EN 15940 standard)		Yes
Transmission		
Transmission type		M-Varioshift
Number of gears (forward / reverse)		2 / 2
Max. travel speed (may vary according to applicable regulations)		24 mph
Differential lock		Limited slip differential on front axle
Parking brake		Manual
Service brake		Oil-Immersed multi-discs braking on front axles
Hydraulics		
Hydraulic pump type		Gear pump
Hydraulic flow - Pressure		28 US gpm - 3626 PSI
Flow sharing distributor		Option
Tank capacities		
Hydraulic oil		25 US gal
Fuel tank		21 US gal
Diesel Exhaust fluid (AdBlue® type)		3 US gal
Noise and vibration		
Noise at driving position (LpA) tested following NF EN 12053 norm		73 dB
Noise to environment (LwA)		106 dB
Vibration to whole hand/arm		< 2.50 m/s²
Miscellaneous		
Tractor homologation		Tractor homologation
Safety cab homologation		ROPS - FOPS level 2 cab
Controls		JSM

Optional tires tab

Optional tires	Overall height	Overall width
ALLIANCE - A331 - 500/45-20 159A8	6 ft 11 in	7 ft 3 in
MICHELIN - BIBLOAD - 400/70 R20 149A8	7 ft 2 in	6 ft 9 in
MICHELIN - XMCL - 400/70 R20 149A8	7 ft	6 ft 9 in

MLT 630-115 V CP - Dimensional drawing

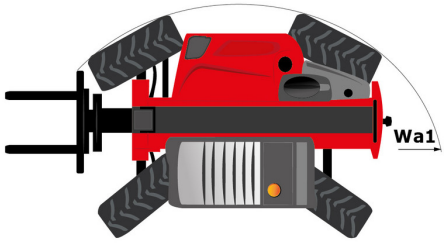

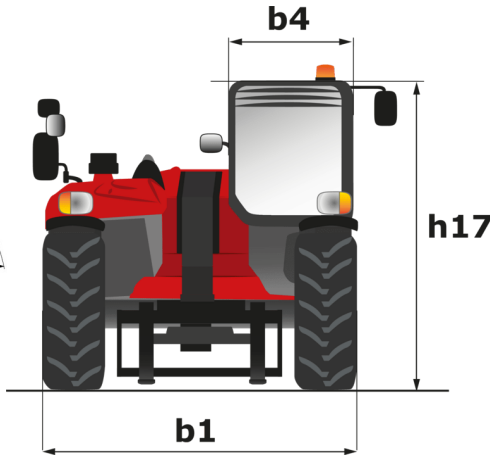

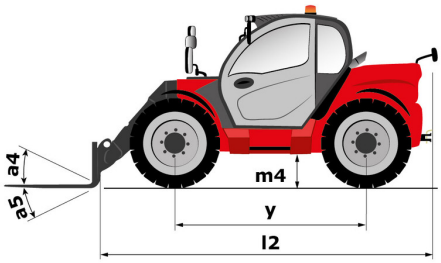

Head Office
B.P. 249 - 430 rue de l'Aubinière
44150 Ancenis Cedex - France
Tel: +33 (0)2 40 09 10 11 - Fax: +33 (0)2 40 09 10 97
www.manitou.com

This publication provides a description of the configuration versions and options for Manitou products, which may differ for equipment. The equipment presented in this brochure may be part of a series, as an option, or it may not be available, depending on the versions. Manitou reserves the right, at any time and without notice, to amend the specifications described and represented. The specifications provided do not bind the manufacturer. For more details, please contact your Manitou agent. This is not a contractually binding document. The presentation of the products is not contractually binding. List of specifications non-exhaustive. The logos as well as the visual identity of the company are owned by Manitou and cannot be used without authorisation. All rights reserved. The photos and diagrams contained in this brochure are only provided for consultation and information purposes.
MANITOU BF SA - Limited company with board of directors - Share capital: 39,668,399 euros - 857 802 508 RCS Nantes