Technical sheet :

MLT 733-115 LSU

MANITOU
HANDLING YOUR WORLD

Capacities		Metric
Max. capacity	Q	3300 kg
Max. lifting height	h3	6.90 m
Max. outreach		3.90 m
Reach at max. height		0.90 m
Breakout force with bucket		5184 daN
Weight and dimensions		
Unladen weight (with forks)		7120 kg
Ground clearance	m4	0.44 m
Wheelbase	y	2.81 m
Overall length to carriage (with hitch)	l11	4.85 m
Overall length to carriage (without hitch)	l3	4.77 m
Front overhang		1.21 m
Overall width	b1	2.39 m
Overall cab width	b4	0.95 m
Overall height	h17	2.38 m
Tilt-down angle	a5	134 °
Tilt-up angle	a4	12 °
External turning radius (over tyres)	Wa1	3.93 m
Standard tires		Alliance - A580 - 460/70 R24 159A8
Drive wheels (front / rear)		2 / 2
Steering wheels (front / rear)		2 / 2
Performances		
Lifting		6.20 s
Lowering		5.80 s
Extension		5.50 s
Retraction		5.30 s
Crowd		2.80 s
Dump		2.30 s
Engine		
Engine brand		Deutz
Engine norm		Stage V
Engine model		TCD 3.6 L4
Number of cylinders - Capacity of cylinders		4 - 3621 cm³
I.C. Engine power rating / Power		116 Hp / 85 kW
Max. torque / Engine rotation		460 Nm @1600 rpm
Drawbar pull (Laden)		7800 daN
Reversible fan		Option
Engine cooling system		4 radiators (water + intercooler + hydraulic oil + transmission oil)
HVO validated (according to EN 15940 standard)		Yes
Transmission		
Transmission type		Torque converter
Gearbox		Powershuttle
Number of gears (forward / reverse)		4 / 4
Max. travel speed (may vary according to applicable regulations)		33 km/h
Differential lock		Limited slip differential on front axle
Parking brake		Automatic negative parking brake
Service brake		Oil-immersed multi-discs braking on front & rear axles
Hydraulics		
Hydraulic pump type		Variable displacement pump
Hydraulic flow - Pressure		150 l/min - 270 bar
Flow sharing distributor		Standard
Tank capacities		
Hydraulic tank capacity		135 l
Fuel tank		120 l
Diesel Exhaust fluid (AdBlueÂ® type)		10 l
Noise and vibration		
Noise at driving position (LpA) tested following NF EN 12053 norm		75 dB
Noise to environment (LwA)		106 dB
Vibration on hands/arms		< 2.50 m/s²
Miscellaneous		
Tractor homologation		Tractor homologation
Safety cab homologation		Cabin ROPS - FOPS level 2
Controls		JSM

Optional tires tab

	Overall height	Overall width
TRELLEBORG - TH400 - 500/70 R24 164A8	2.37 m	2.40 m
TRELLEBORG - TH400 - 460/70 R24 159A8	2.39 m	2.42 m
MICHELIN - XMCL - 500/70 R24 164A8	2.39 m	2.43 m
MICHELIN - BIBLOAD - 460/70 R24 159A8	2.37 m	2.40 m
MICHELIN - BIBLOAD - 500/70 R24 164A8	2.39 m	2.43 m
MICHELIN - XHA - 15.5 R25	2.37 m	2.40 m
NOKIAN - TRI STEEL - 460/65 R24 156A8	2.36 m	2.40 m
VREDESTEIN - ENDURION - 460/70 R24 159A8	2.38 m	2.41 m
VREDESTEIN - ENDURION - 500/70 R24 164A8	2.41 m	2.44 m
TRELLEBORG - TH500 - 460/70 R24 159A8	2.37 m	2.40 m
ALLIANCE - A585 - 460/70 R24 159A8	2.37 m	2.40 m

MLT 733-115 LSU - Dimensional drawing

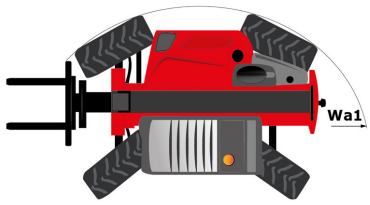

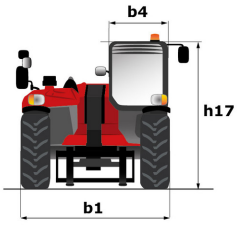

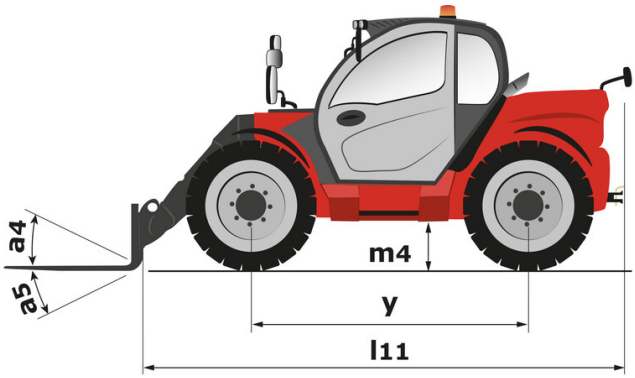

MLT 733-115 LSU - Load chart

Machine on tires with forks Metric

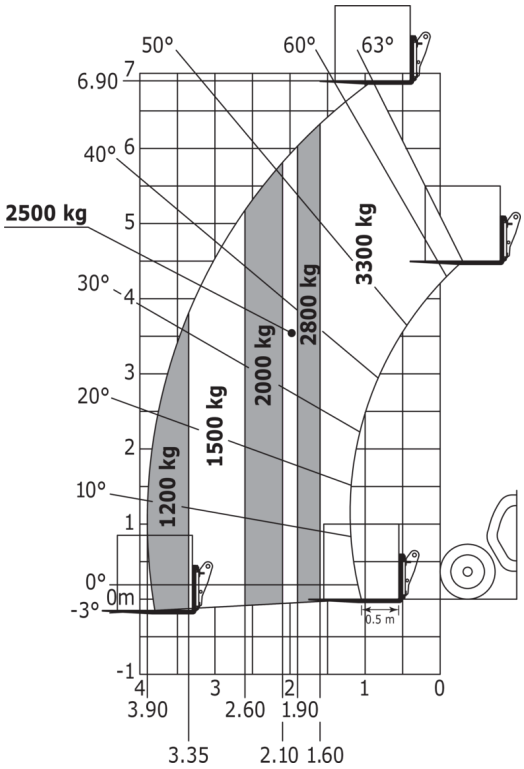

Head Office
B.P. 249 - 430 rue de l'Aubinière
44150 Ancenis Cedex - France
Tel: +33 (0)2 40 09 10 11 - Fax: +33 (0)2 40 09 10 97
www.manitou.com

This publication provides a description of the configuration versions and options for Manitou products, which may differ for equipment. The equipment presented in this brochure may be part of a series, as an option, or it may not be available, depending on the versions. Manitou reserves the right, at any time and without notice, to amend the specifications described and represented. The specifications provided do not bind the manufacturer. For more details, please contact your Manitou agent. This is not a contractually binding document. The presentation of the products is not contractually binding. List of specifications non-exhaustive. The logos as well as the visual identity of the company are owned by Manitou and cannot be used without authorisation. All rights reserved. The photos and diagrams contained in this brochure are only provided for consultation and information purposes.
MANITOU BF SA - Limited company with board of directors - Share capital: 39,668,399 euros - 857 802 508 RCS Nantes